FIRST Tech Challenge

October 2023
Wiring, Coding, Vision Portal

Agenda

Saturday Morning - Introductions, What is *FIRST*?,
Robot Resources, CENTRESTAGE game

Saturday Afternoon - FTC Events, Portfolios, Fundraising

Sunday Morning - Wiring, Coding, Vision Portal

Sunday Afternoon - Advanced Programming or

FIRST Software, Q&A,

Agenda

- Follow-up from Saturday
- Wiring Robots
- Programming Languages
- Resources
- Vision Portal

Wiring Robots

Wiring Robots

WiFi Direct Connection

Wiring a Robot - Control Hub

Control Hub
REV-31-1595

Wiring a Robot - Power Switch and Battery

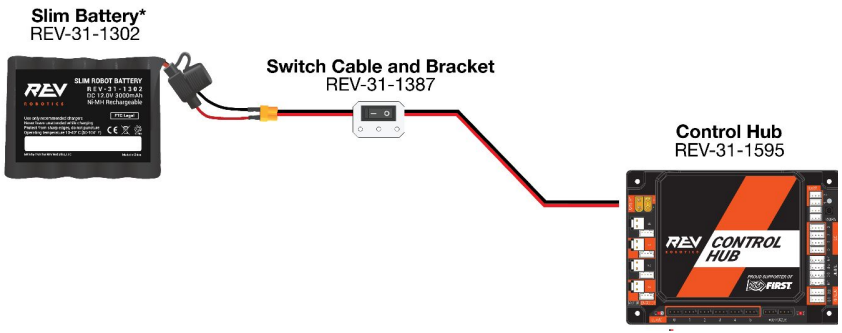

Wiring a Robot - DC Motors and Encoders

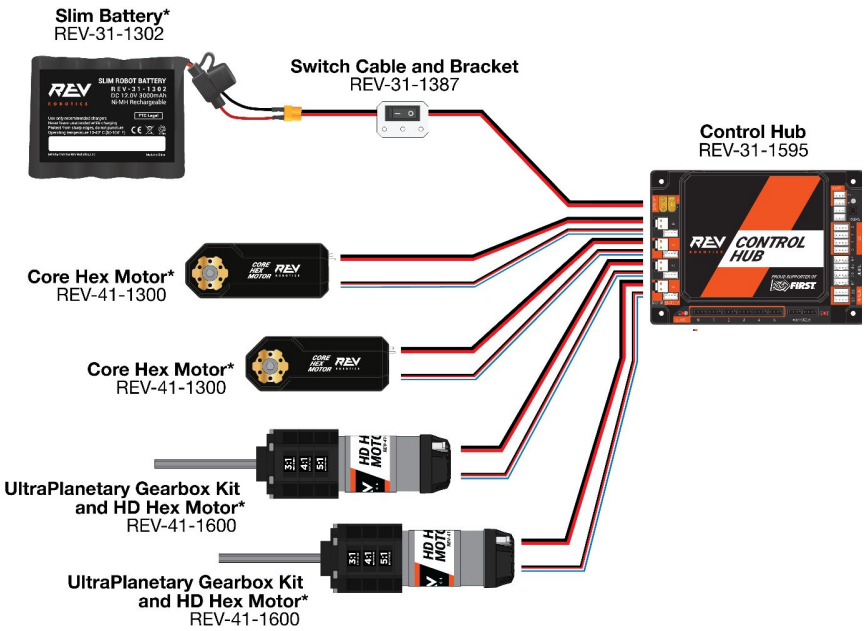

Wiring a Robot - Servos

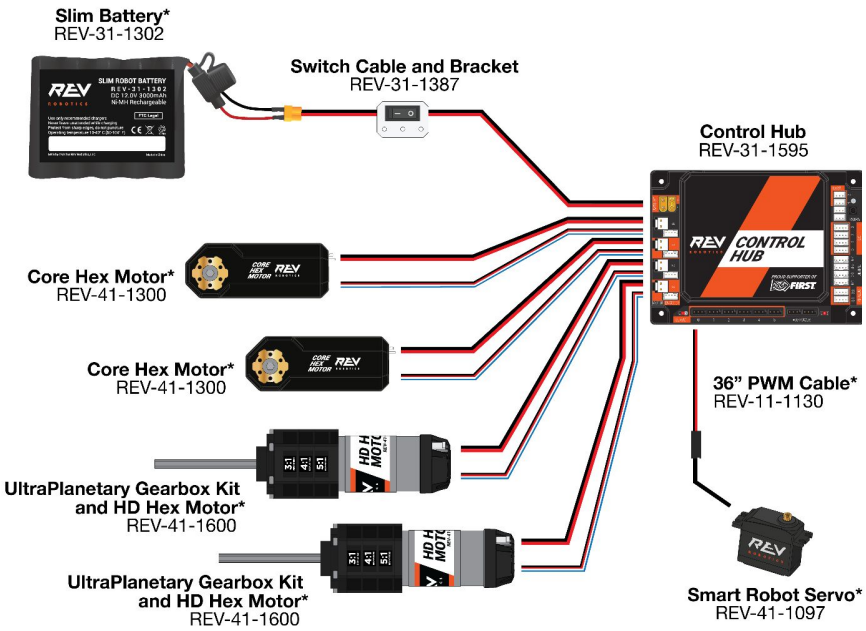

Wiring a Robot - Sensors

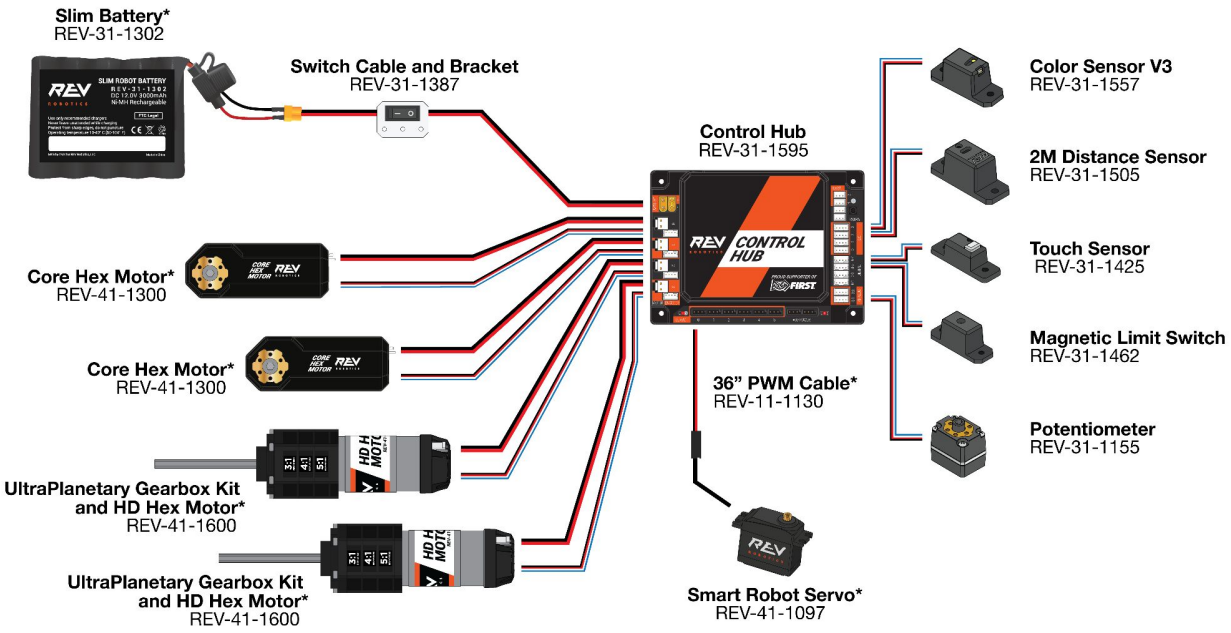

Wiring a Robot - Webcam

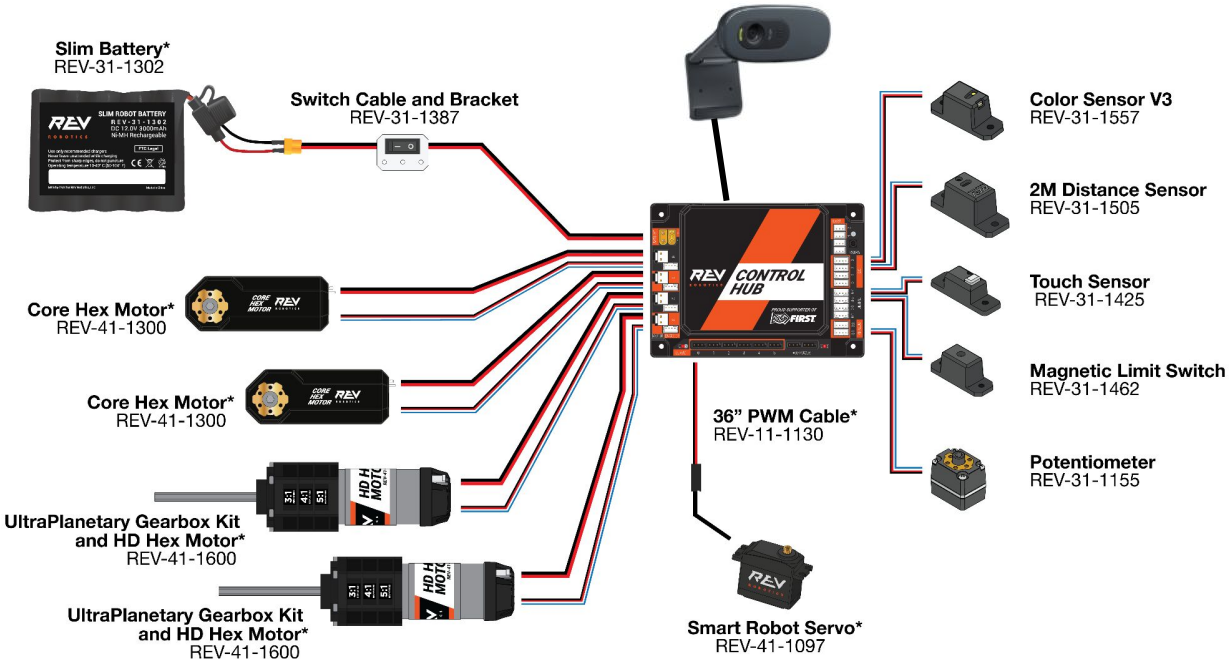

Equipment

Variety of options to extend capabilities of hubs
- Expansion Hub
- Servo Power modules
- Sparc mini to add DC motors
- Power distribution block

Wiring

- FTC Wiring Guide
  https://www.firstinspires.org/sites/default/files/uploads/resource_library/ftc/robot-wiring-guide.pdf

  Good for troubleshooting wiring issues

- FTC Docs
  https://ftc-docs.firstinspires.org/control_hard_compon/rc_components/index.html

  Better for learning how to wire a robot

Programming

Configuring a Robot

Creating a map that connects the hardware to the names used in programming.

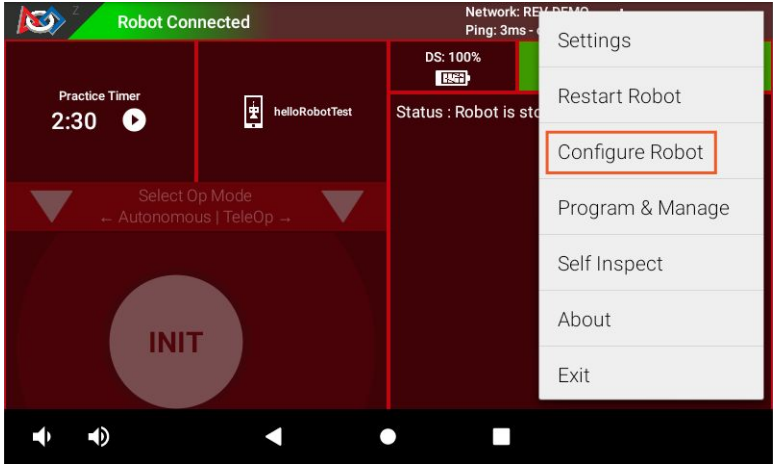

Choice of Programming Language

- **Blocks**
  browser-based drag and drop programming
- **OnBot Java**
  browser-based text programming
- **Android Studio**
  integrated software development environment

Blocks Programming

- similar to Scratch
- visual drag and drop customizable blocks
- browser-based (nothing to install)
- Fast compile times

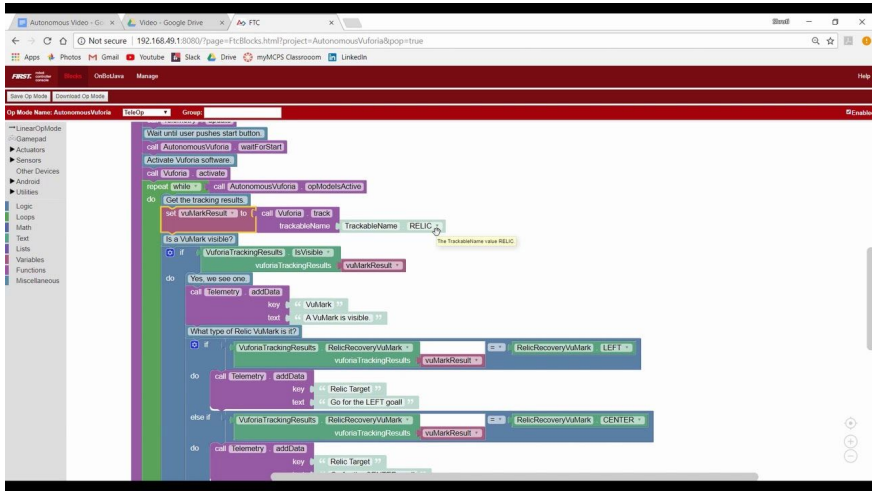

Use FTCSIM.org to learn about coding in Blocks.

OnBot Java

- Text based Java
- Browser-based, nothing to install
- Fast compile times

Use FTCSIM.org to learn about coding in Java.

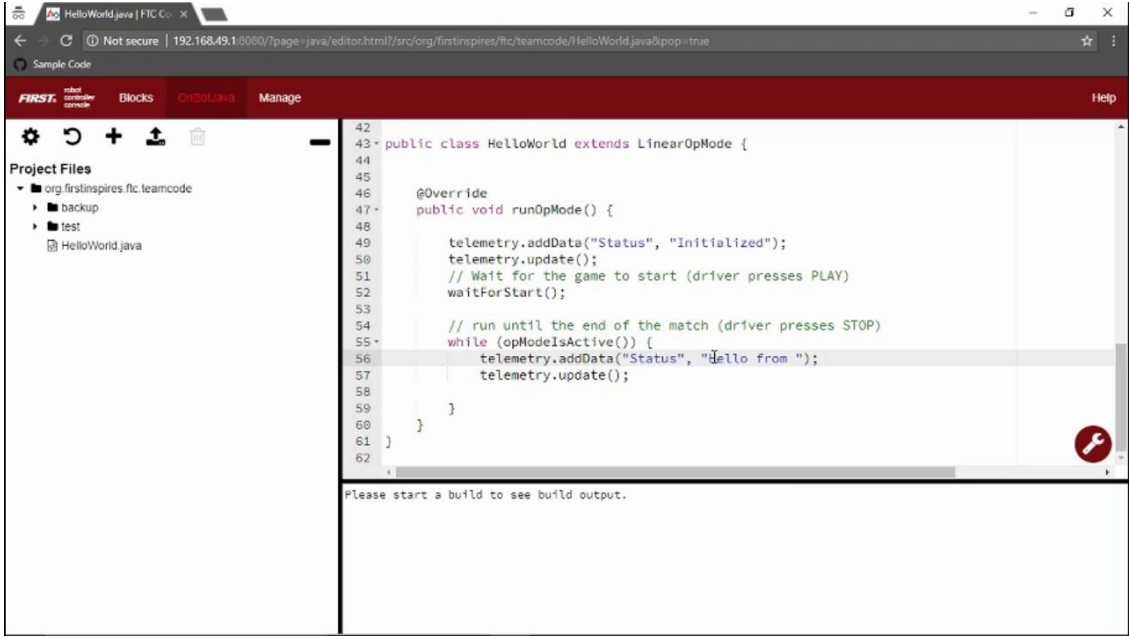

Android Studio - Java

- Full Development Environment
- Text-based Java
- Installed on PC or laptop
- Use GitHub for version control
- Students can learn to write other types of Apps

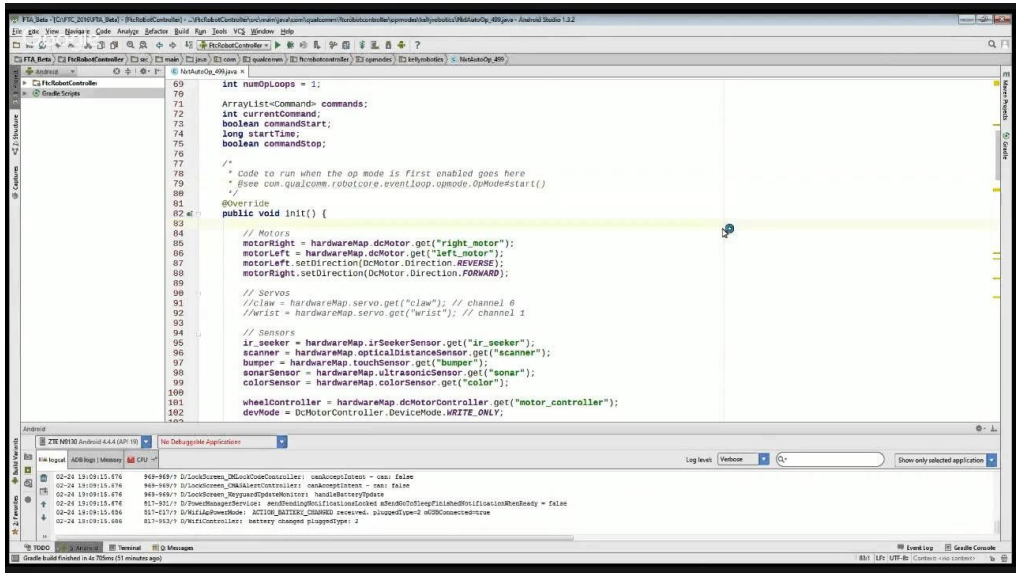

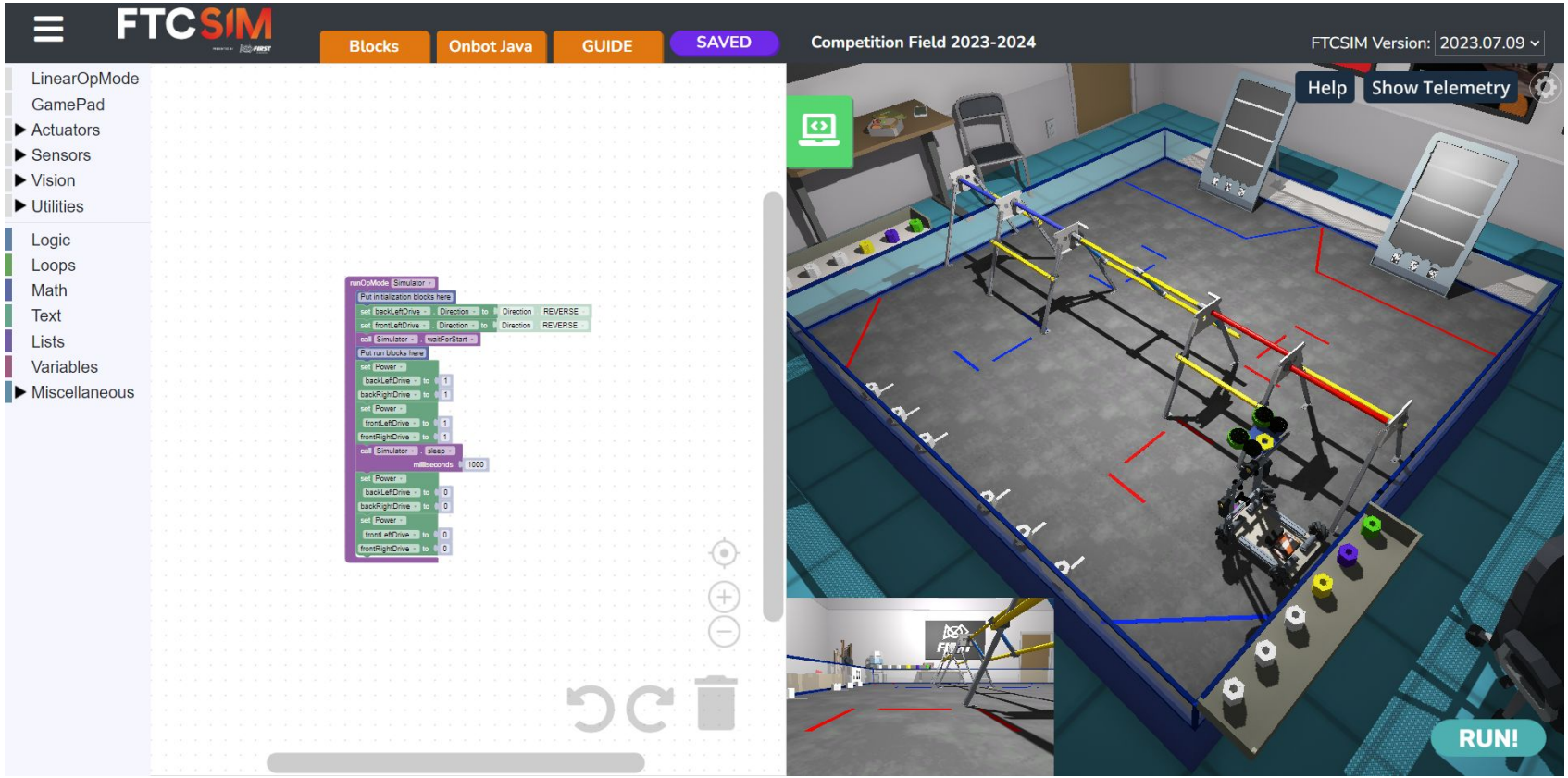
FTCSIM
Blocks
Onbot Java
GUIDE
SAVED
Competition Field 2023-2024
FTCSIM Version: 2023.07.09
LinearOpMode
GamePad
Actuators
Sensors
Vision
Utilities
Logic
Loops
Math
Text
Lists
Variables
Miscellaneous
runOpMode Simulator
Put initialization blocks here
set backLeftDrive Direction to Direction REVERSE
set frontLeftDrive Direction to Direction REVERSE
call Simulator waitForStart
Put run blocks here
set Power
backLeftDrive to 1
backRightDrive to 1
set Power
frontLeftDrive to 1
frontRightDrive to 1
call Simulator sleep
milliseconds 1000
set Power
backLeftDrive to 0
backRightDrive to 0
set Power
frontLeftDrive to 0
frontRightDrive to 0
Help
Show Telemetry
RUN!

Programming Resources

- FTC Docs - Programming Section
  https://ftc-docs.firstinspires.org/programming_resources/index.html

- How to videos from *FIRST*
  https://www.youtube.com/watch?v=yGOIJG6d3g0&list=PLq-SuSZcm5veW1kiK8JenKZoQgtrHi1on

- ChatGPT - often can find examples of Java code

- Reach out to other teams (Discord, Reddit, …)
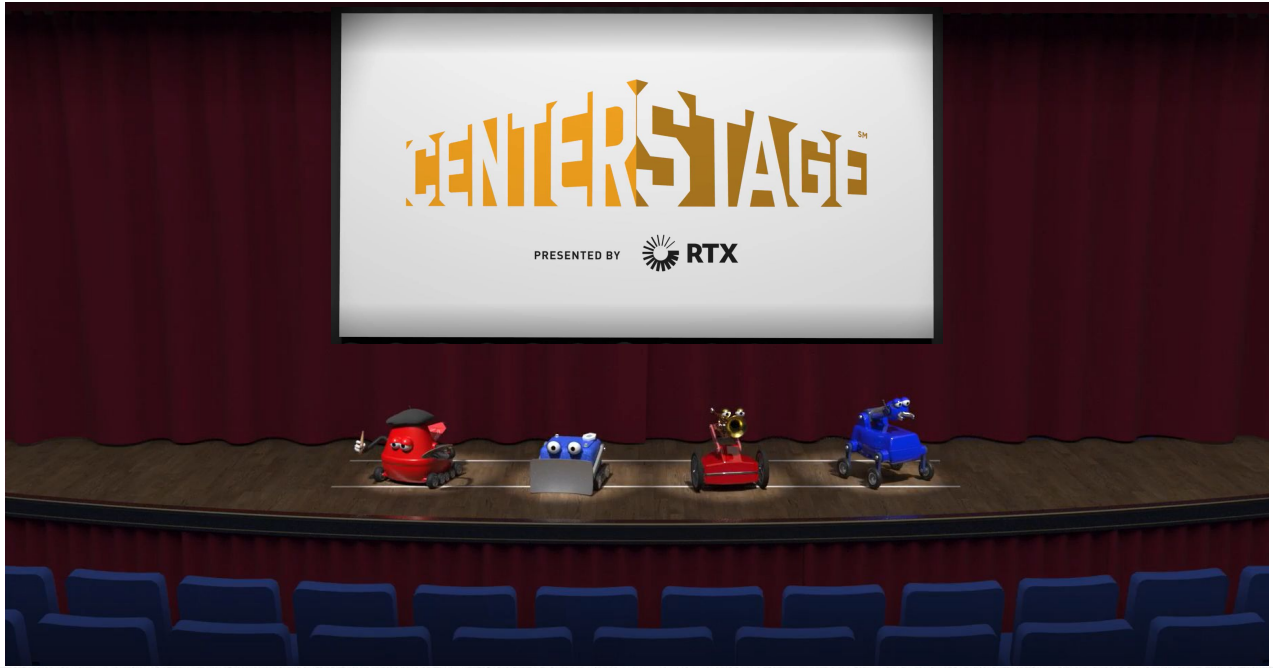
Good Luck this Season!