FIRST Tech Challenge Coaches, Mentors

November 2022

Wiring and Robot Software

Agenda

Saturday Morning - Introductions, What is *FIRST*?, Building Game, Robot Resources

Saturday Afternoon - Wiring, Programming Robots (software choices, tensorflow, FTC Sim, Programming help, real robots)

Sunday Morning - FTC Events, Judging, Engineering Portfolios,

Sunday Afternoon - *FIRST* Software, REV Hubs, Q&A, Competitions, PowerPlay Game

Agenda

- Wiring
- Programming Robots - software choices, tensorflow
- FTC Sim
- Programming help
- real robots
- Tensorflow

Wiring

- FTC Wiring Guide
  https://www.firstinspires.org/sites/default/files/uploads/resource_library/ftc/robot-wiring-guide.pdf

  Good for troubleshooting wiring issues

- FTC Docs
  https://ftc-docs.firstinspires.org/control_hard_compon/rc_components/index.html

  Better for learning how to wire a robot

Wiring Robots

WiFi Direct Connection

Wiring a Robot - Control Hub

Control Hub
REV-31-1595

Wiring a Robot - Power Switch and Battery

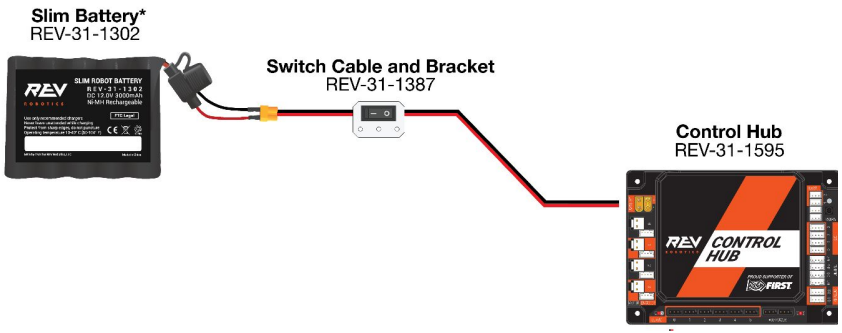

Wiring a Robot - DC Motors and Encoders

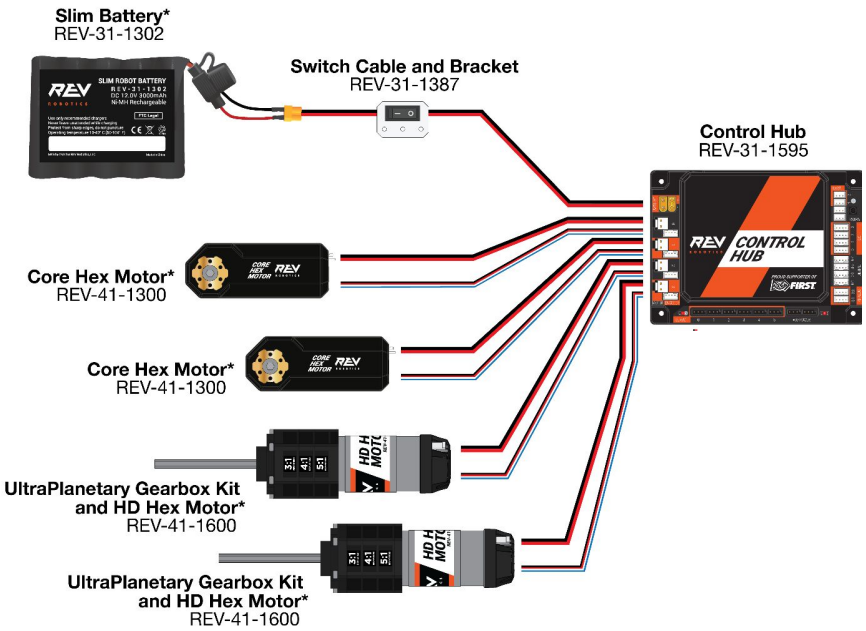

Wiring a Robot - Servos

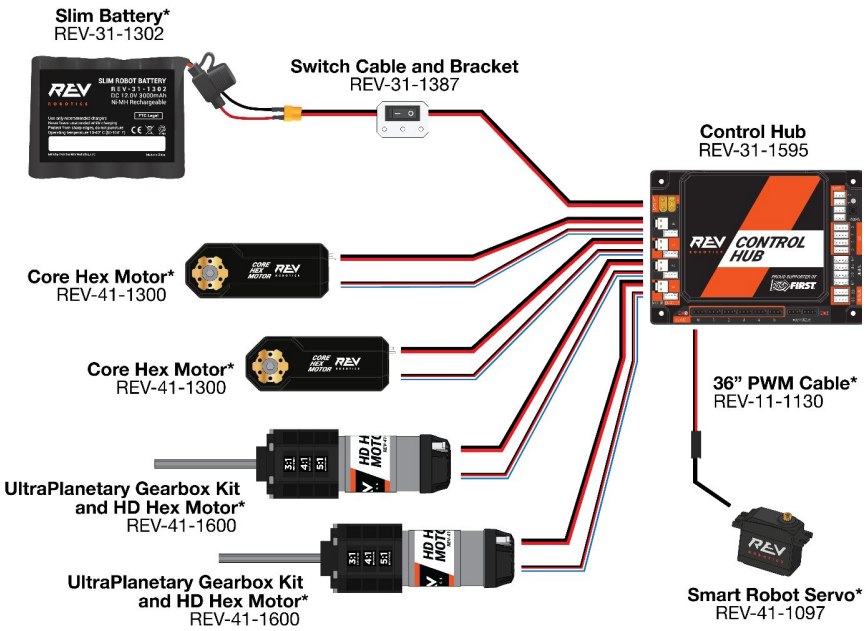

Wiring a Robot - Sensors

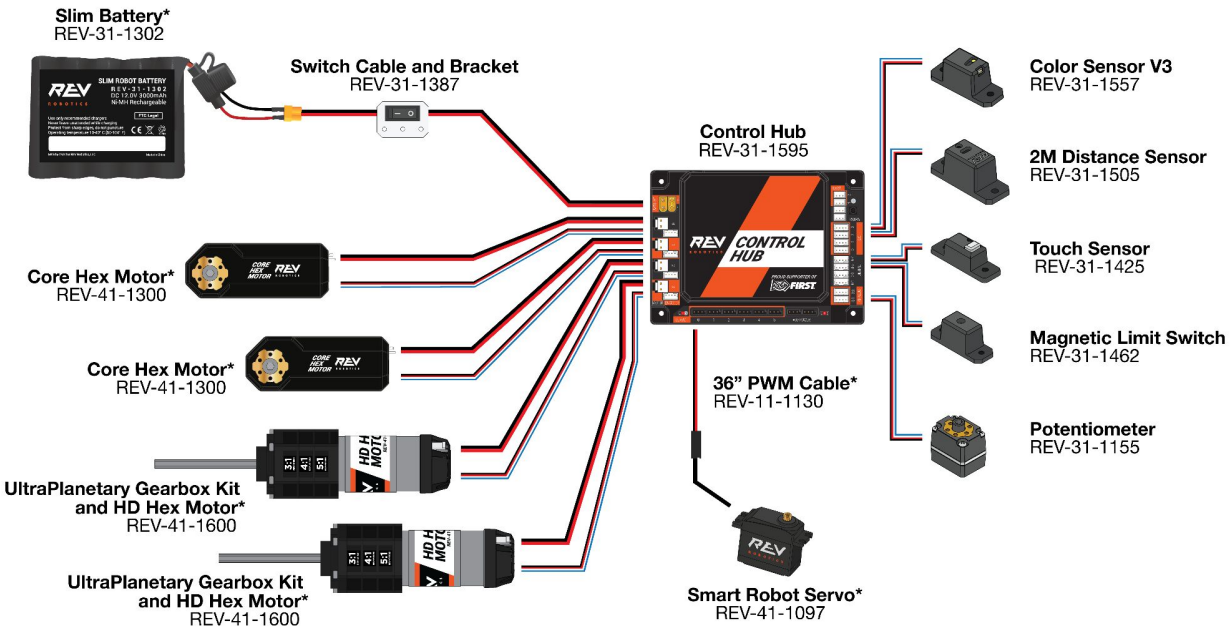

Equipment

- New Teams who can order one Control Hub through the *FIRST* Storefront.

- Variety of options to extend capabilities of hubs
  - Servo Power modules
  - Sparc mini to add DC motors
  - Power distribution block

- Contact me if your team urgently needs a replacement hub.

Programming

Configuring a Robot

Creating a map that connects the hardware to the names used in programming.

CONFIGURING AND PROGRAMMING THE STARTER BOT

REV ROBOTICS

30 seconds Autonomous Programming

- robot move using time, encoders, or sensors
- decisions on robot actions could incorporate augmented reality or artificial intelligence

⇒ lots of experience with unintended consequences, need for planning, and robot interactions.

120 seconds Driver Controlled Programming

- mapping robot functions to Gamepad
- pre-programmed driver enhancements

⇒ need for driver practice, collaboration between programmers and drivers, quick decision making to optimize outcomes.

Choice of Programming Language

- **Blocks**
  browser-based drag and drop programming
- **OnBot Java**
  browser-based text programming
- **Android Studio**
  integrated software development environment

Blocks Programming

- similar to Scratch
- visual drag and drop customizable blocks
- browser-based (nothing to install)
- Fast compile times

Autonomous Video - Go | Video - Google Drive | FTC

Not secure | 192.168.49.1:8080/?page=FtcBlocks.html?project=AutonomousVuforia&pop=true

Apps | Photos | Gmail | Youtube | Slack | Drive | myMCPS Classrooom | LinkedIn

FIRST robot controller console | Blocks | OnBotJava | Manage | Help

Save Op Mode | Download Op Mode

Op Mode Name: AutonomousVuforia | TeleOp | Group: | Enable

- LinearOpMode
- Gamepad
- Actuators
- Sensors
- Other Devices
- Android
- Utilities
- Logic
- Loops
- Math
- Text
- Lists
- Variables
- Functions
- Miscellaneous

```
Wait until user pushes start button.
call AutonomousVuforia . waitForStart
Activate Vuforia software.
call Vuforia . activate
repeat while call AutonomousVuforia . opModeIsActive
do  Get the tracking results.
    set vuMarkResult to call Vuforia . track
                        trackableName  TrackableName  RELIC
                                       The TrackableName value RELIC.
    Is a VuMark visible?
    if  VuforiaTrackingResults . IsVisible
                vuforiaTrackingResults  vuMarkResult
    do  Yes, we see one.
        call Telemetry . addData
                key  "VuMark"
                text  "A VuMark is visible."
        What type of Relic VuMark is it?
        if  VuforiaTrackingResults . RelicRecoveryVuMark  =  RelicRecoveryVuMark . LEFT
                vuforiaTrackingResults  vuMarkResult
        do  call Telemetry . addData
                key  "Relic Target"
                text  "Go for the LEFT goal!"
        else if  VuforiaTrackingResults . RelicRecoveryVuMark  =  RelicRecoveryVuMark . CENTER
                vuforiaTrackingResults  vuMarkResult
        do  call Telemetry . addData
                key  "Relic Target"
```

OnBot Java

- Text based Java
- Browser-based, nothing to install
- Fast compile times

HelloWorld.java | FTC Co

Not secure | 192.168.49.1:8080/?page=java/editor.html?/src/org/firstinspires/ftc/teamcode/HelloWorld.java&pop=true

Sample Code

FIRST robot controller console | Blocks | OnBotJava | Manage | Help

Project Files

- org.firstinspires.ftc.teamcode
  - backup
  - test
  - HelloWorld.java

```
42
43 public class HelloWorld extends LinearOpMode {
44
45
46     @Override
47     public void runOpMode() {
48
49         telemetry.addData("Status", "Initialized");
50         telemetry.update();
51         // Wait for the game to start (driver presses PLAY)
52         waitForStart();
53
54         // run until the end of the match (driver presses STOP)
55         while (opModeIsActive()) {
56             telemetry.addData("Status", "Hello from ");
57             telemetry.update();
58
59         }
60     }
61 }
62
```

Please start a build to see build output.

Android Studio - Java

- Text-based Java
- Full Development Environment
- Installed on PC or laptop
- Use GitHub for version control
- Students can learn to write other types of Apps

```java
int numOpLoops = 1;

ArrayList<Command> commands;
int currentCommand;
boolean commandStart;
long startTime;
boolean commandStop;

/*
 * Code to run when the op mode is first enabled goes here
 * @see com.qualcomm.robotcore.eventloop.opmode.OpMode#start()
 */
@Override
public void init() {

    // Motors
    motorRight = hardwareMap.dcMotor.get("right_motor");
    motorLeft = hardwareMap.dcMotor.get("left_motor");
    motorLeft.setDirection(DcMotor.Direction.REVERSE);
    motorRight.setDirection(DcMotor.Direction.FORWARD);

    // Servos
    //claw = hardwareMap.servo.get("claw"); // channel 6
    //wrist = hardwareMap.servo.get("wrist"); // channel 1

    // Sensors
    ir_seeker = hardwareMap.irSeekerSensor.get("ir_seeker");
    scanner = hardwareMap.opticalDistanceSensor.get("scanner");
    bumper = hardwareMap.touchSensor.get("bumper");
    sonarSensor = hardwareMap.ultrasonicSensor.get("sonar");
    colorSensor = hardwareMap.colorSensor.get("color");

    wheelController = hardwareMap.dcMotorController.get("motor_controller");
    devMode = DcMotorController.DeviceMode.WRITE_ONLY;
```

Tensorflow

FTC Docs
https://ftc-docs.firstinspires.org/programming_resources/vision/tensorflow_pp_2022/tensorflow_pp_2022.html

FTCSim.org

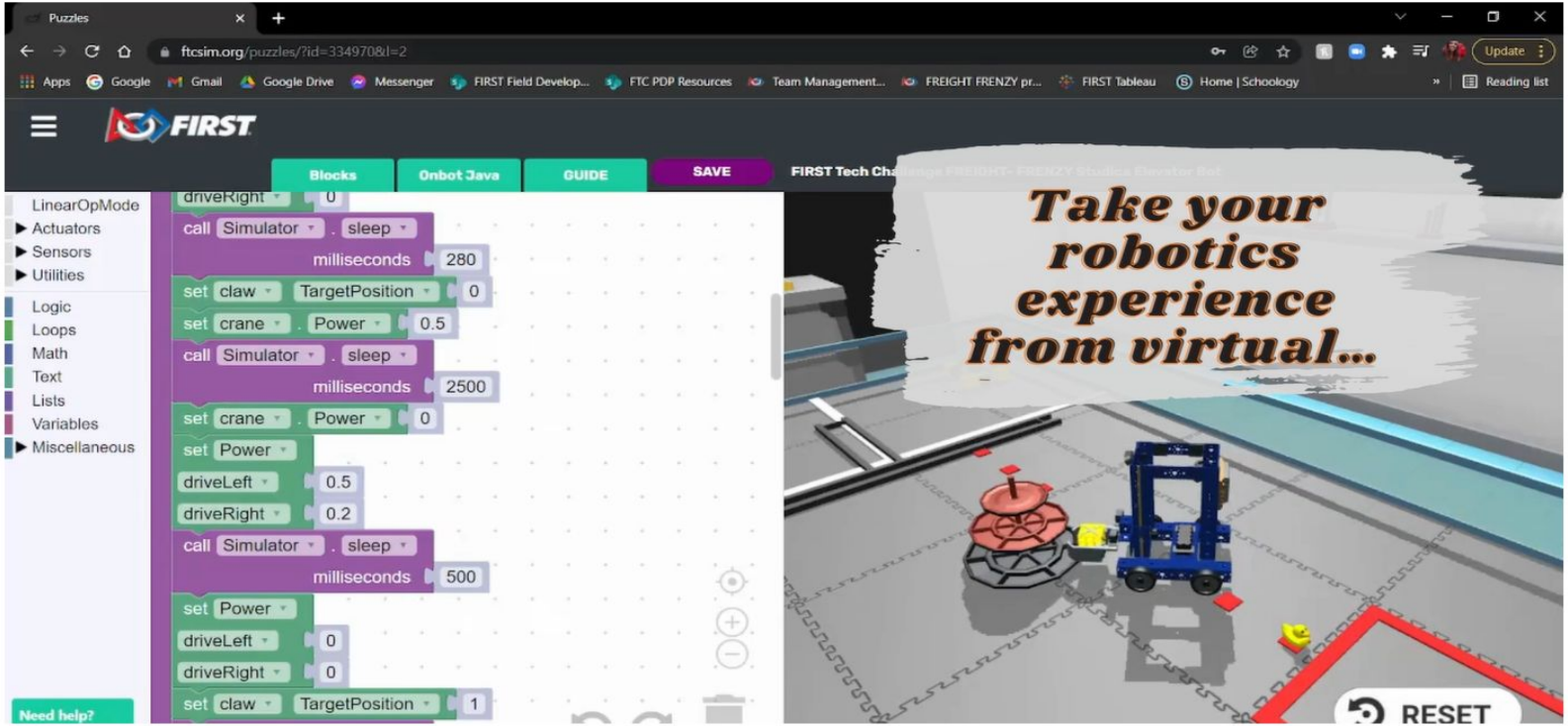
Puzzles
ftcsim.org/puzzles/?id=334970&l=2
Update
Apps
Google
Gmail
Google Drive
Messenger
FIRST Field Develop...
FTC PDP Resources
Team Management...
FREIGHT FRENZY pr...
FIRST Tableau
Home | Schoology
Reading list
FIRST
Blocks
Onbot Java
GUIDE
SAVE
LinearOpMode
Actuators
Sensors
Utilities
Logic
Loops
Math
Text
Lists
Variables
Miscellaneous
Need help?
driveRight 0
call Simulator . sleep
milliseconds 280
set claw TargetPosition 0
set crane . Power 0.5
call Simulator . sleep
milliseconds 2500
set crane . Power 0
set Power
driveLeft 0.5
driveRight 0.2
call Simulator . sleep
milliseconds 500
set Power
driveLeft 0
driveRight 0
set claw TargetPosition 1
Take your robotics experience from virtual...
RESET

TIME FOR A BREAK

Writing your first Ap

- Turn on robot and driver station
- Connect your laptop to the wifi network for your robot
- Go to URL listed on note
  http://192.168.43.1:8080/ or
  http://192.168.49.1:8080/

FIRST
Op Mode Name: SampleOpMode
Group:
LinearOpMode
Gamepad
Actuators
Sensors
Other Devices
Utilities
Logic
Loops
Math
Text
Lists
Variables
Functions
Miscellaneous

Running your first Ap

- Save the Opmode *upper left of the screen*
- On the driver station, click on tele-op, pick the program from the drop down menu
- Press Init, then Run

Programming Videos

https://www.youtube.com/watch?v=yGOIJG6d3g0&list=PLq-SuSZcm5veW1kiK8JenKZoQgtrHi1on

Videos on:

- Using a colour sensor
- Using IMU sensor to control robot movements
- How to use Artificial Intelligence (Tensorflow) or Augmented Reality (Vuforia).

FIRST
Group:

Programming Resources

- FTC Docs - Programming Section
  https://ftc-docs.firstinspires.org/programming_resources/index.html

- How to videos from *FIRST*
  https://www.youtube.com/watch?v=yGOIJG6d3g0&list=PLq-SuSZcm5veW1kiK8JenKZoQgtrHi1on

- Reach out to other teams
  (Discord, Reddit, …)

Questions

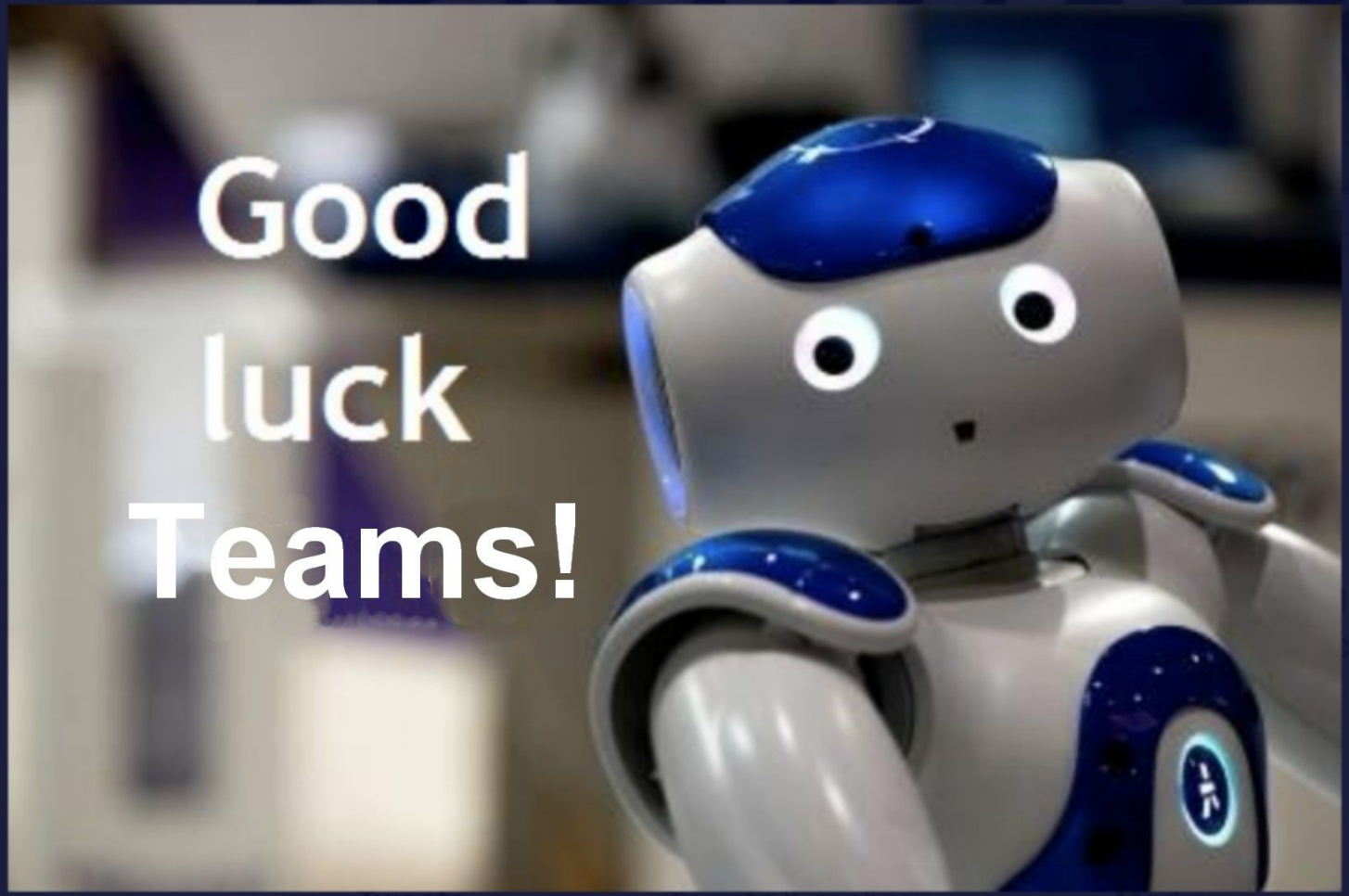
Good
luck
Teams!