Practical Guide to Robotics

ENTRADOX
ROBOTICS

Contents

Team Entradox 2021-2022 FTC Freight Frenzy

0 Getting Started

0.1 What is FIRST and FTC?

FIRST is a robotics competition organizer that targets students from grade 2 to grade 12 to compete in fun, educational contests. FIRST Tech Challenge, also known as FTC, is designed for students from grade 7-12. The pinnacle of their competition ladder, FIRST Robotics Challenge (FRC), is designed for grade 9-12. The main difference between the two contests is the size of the robot, FRC being approximately 3-4 times more expensive than FTC.

In FTC, there are local leagues, such as FIRST BC. The league will usually organize 2-3 match days during the season for teams to practice and enhance their robot design. These matches are called scrimmages, not counted towards elimination, but sometimes contributed to the qualifiers. During Qualifiers, a few teams with low rank will be eliminated, and top teams will likely advance to another qualifier or a regional final.

Matches are formatted in such a way – a 30-second Autonomous period and a 2-minute TeleOp period. During the Autonomous period, drivers are prohibited from touching their controllers. Once the Autonomous period end, the game will allow drivers to switch their program and pick up their controllers. After the TeleOp period start, drivers may score points by remotely controlling the robot. At the end of the TeleOp period, there is an End Game period where teams may score extra bonus points. The points are totaled by calculating the cumulative point score from your alliance.

Regional finals usually will consist of no more than 30 teams. The top 4 teams on the points ranking usually will become alliance leader, where they may choose their alliance partner in the following few rounds. They will play with other alliances and the winner of each match will

advance to the next round. The winning alliance of the final match will be awarded champion of the robot matches.

FTC's motto is gracious professionalism. Teams are obliged to take care of each other, maintain their sportsmanship throughout the competition, and network with fellow competitors. Even if a team have a barely functioning robot, the team will score points by simply showing up to each match. To win an FTC match, you need to collaborate with other teams who may be your rival. The whole experience of FTC is enlightening, fully of laughter entwined in fierce contest.

0.2 How to Build a Robot?

There are many build kits available on the market, some of the popular ones include REV Robotics, Tetrix, Actobotics, and GoBilda (as well as Andymark but most team only use a few parts from them). These kits will give you the most basic metal pieces for the structures, some sort of powertrain system, and a few servos and motors, as well as some electronic control units.

Most of these kits are very easy to use. For more information, please refer to section 3, Build Kit Manifests, Hardware Guide, and Resources.

0.3 How to Control the Robot?

FTC uses REV Robotics Electronics, as well as phones and webcams to control the robot. The competition consists of two segments – autonomous control and remote control. In both cases, a Control Hub or a phone on the robot will communicate with a Driver Station or a phone that is at the alliance station. These parts are all preprogrammed and are very easy to setup. Please refer to section 2, Electronic Guide and Resources.

0.4 What to Do at the Competition?

FTC is part of the FIRST "ecosystem", meaning the competition's main spirit is gracious professionalism. All events are designed around this spirit. Please refer to section 5, Competition Day Guide, for more information.

0.5 How to Use this Guide?

We acknowledge the recipients of this guide may be from a variety of background and the degree of competitiveness of each team may vary. Therefore, we have divided each section into three subsections: Beginner, Intermediate, and Advanced.

As a robotics guide, the occasional use of jargons is almost unavoidable; therefore, as a supplement, section 1, Glossary, will introduce you to the vocabulary necessary for fully comprehending the ideas covered in this guide.

This guide is extremely long and may be very boring to read. As a practical guide, we sincerely encourage you to read through the entirety of the guide as some information may eventually prove to be useful. However, that may not be realistic for all recipients. Therefore, we have created printable posters that are accessible from our team website.

We hope that this guide may be useful to your team. Please feel free to contact grace.yu@meadowridge.bc.ca for further explanation of any topic addressed in this guide. Enjoy reading and best of luck to your season.

1 Glossary

1.1 Competition

Beginner

FTC – First Tech Challenge

FIRST BC – the local event organizers

Leagues – a group of local teams competing in this competition, usually consists of 20-49 teams.

Scrimmages – unofficial league events, although all points will contribute to the qualifiers.

> Autonomous Period – 30 seconds long, the robot will use the programs available to navigate the field and score points.
>
> TeleOp Period – a 2-minute period where drivers are allowed to use the controllers to score points via various challenges.
>
> End Game – the final 30 seconds of the TeleOp period, teams are allowed to score some special points during then.

Qualifiers – events to gain team entrance to regional championships (BC provincial).

Qualifying Matches - the official matches used to determine a Teams ranking. There are usually 6 on the day and will lead to a few teams being eliminated.

Competition Matches – the same with qualifying matches, though no elimination will be associated with the competition ranking.

Alliance – all FTC games will consist of two sides, four teams. The two sides are divided by colors (red and blue). The two teams on the same side are in alliance with each other.

Alliance Partner – the team that is on the same side of you in a specific match. This may change between game to game. It is important that you communicate with them before the match.

Alliance Stations – the place where you and your alliance partners will be during a match.

Drivers – each team have two drivers; they use two controllers to control the robot during the TeleOp period.

Field Coach – an extra member at the alliance stations, mostly focusing on calling out penalties and direct the drivers.

Scouting – watching the matches and make notes regarding each team's robot.

Scoring Guide:

- Partners of the same alliance will earn identical number of points at the end of each match.
- The match points are cumulative, minus the penalty points.
- A team may get negative points at the end of a match, but all negative scores will become 0 before entered into the points calculators.
- Each challenge is worth a certain number of points.

Competition Ranking Calculation:

Each Team at a Competition is ranked according to the following sort order:

1. Total Ranking Points; highest to lowest, then
2. Total TieBreaker Points (TBP1); highest to lowest, then
3. Total TieBreaker Points (TBP2); highest to lowest, then
4. Random electronic selection

Ranking Points and TieBreaker Points are awarded at the end of each Match.

Final Elimination Matches – the top 4 teams (alliance leaders) at the end of competition match will be granted the rights to choose their alliance partner for the following matches. The winning alliance of each match will advance to the next round. The alliance leader of the winner of the final match is the winner of the competition.

Gracious Professionalism – FIRST's motto, teams are obliged to take care of each other, maintain their sportsmanship throughout the competition, and network with fellow competitors.

1.2 Building and Programming the Robot

1.2.1 Hardware

Beginner

Beam – a long piece of sturdy structural piece that primarily resists load laterally to its beam axis.

Bushing – a metal or bearing lining inside a circular hole that usually have an axle revolving there. They are placed to enhance the stability and the smoothness of the axle's rotations.

Channel – a long, U-shaped structural piece that is designed to resist substantial load as well as acting as a location to mount various hardware.

Extrusion – this is often referring to a manufacturing process of pushing materials into a tube with consistent cross-sectional shapes. In robotics, extrusions are the products of the aforementioned fabrication method.

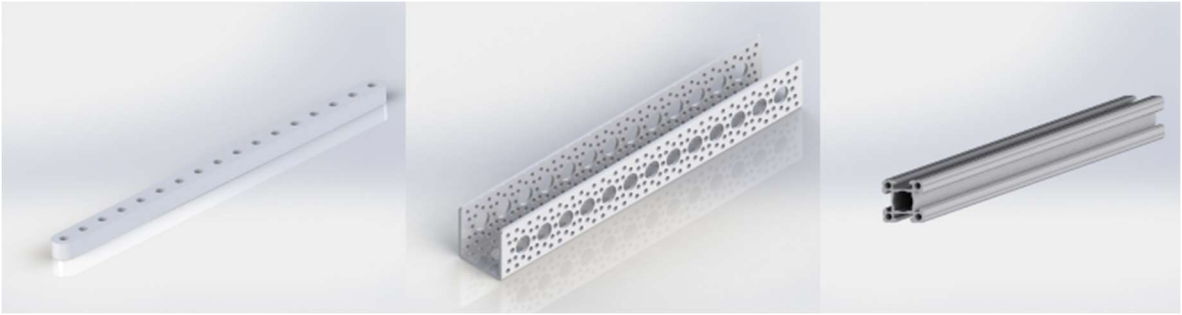

Figure 1: Comparison between the rendered image of Actobotics components: beam (left), channel (center), and extrusion (right).

Machine Screws – metal screws that are commonly used in robotics. When purchasing extra screws for the robot, make sure to purchase machine screws instead of wood screws.

Mecanum Wheel – Wheels that have rollers at an angle where with correct setup may strafe sideways.

Motor – a device that may deliver consistent, continuous rotational power.

Nuts – a fastener that is used to cap off a loose screw/bolt.

Locking – A nut that can prevent bolts from loosening themselves.

Omni Wheel – wheels that have rollers at a right angle to the axis of rotation. By setting them up in a diagonal pattern, they will allow the robot to travel in any direction.

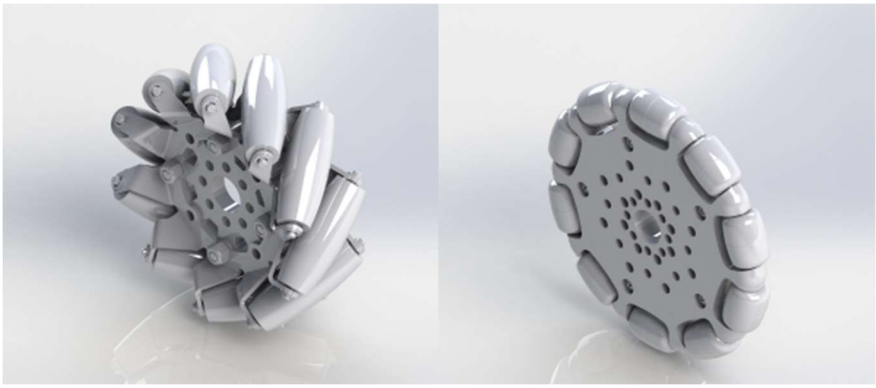

Figure 2: Comparison between the rendered image of GoBilda Mecanum Wheel (left) and Actobotics Omni Wheel (right).

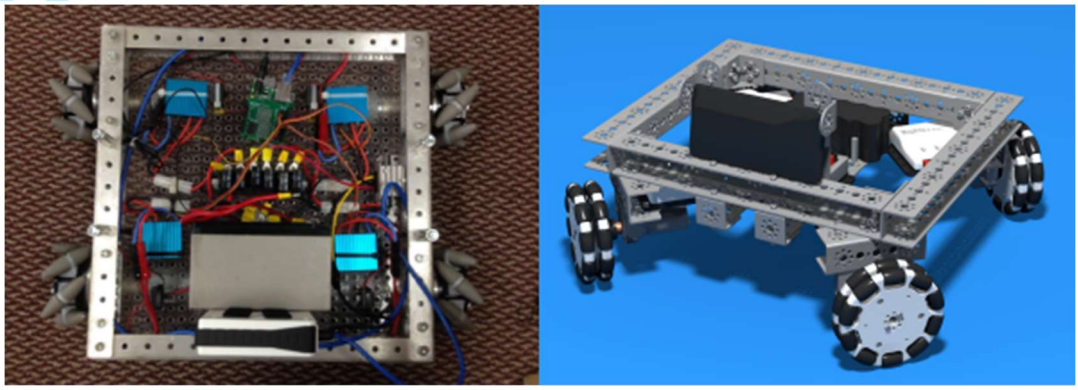

Figure 3: Comparison between the rendered image of a mecanum drivetrain (left) [1] and an omni drivetrain (right) [2].

Plate – essentially a bracket that is flattened. Often, they present a large, flat surface with many pattered holes for mounting different electronics.

Rubber/Heavy Duty Wheel – they are the most reliable wheels, producing the most traction. However, their downside may be not having sufficient degrees of freedom.

Screws – fasteners that have threads on their outside, sometimes also called bolts (although bolts and screws are completely different)[1].

Servo – a device that may deliver rotational power with high torque and instant accurate positioning.

Difference between a servo and a motor:
The biggest distinction between a servo and a motor is that a servo is often in a closed loop system whereas a motor is often in an opened loop system, meaning a motor can turn continuously but most servos can only rotate for around 180 degrees. In addition, motors usually have higher inertia than servos, meaning their power delivery is slightly slower.

Hence, servos are generally used for tasks that require instant, accurate positioning of load; motors are often used in tasks that require a consistent, continuously delivered rotational power.

Shaft – an axle that is often used to items that rotate (ex. Gears, wheels, etc.).

[1] *Quick Note: Technically, screws are fasteners used on threaded objects where bolts are often used on unthreaded objects (Even though the terms are used interchangeably in usual conversations). It may be useful to know that some screws are self-tapping, meaning they make their own threads.*

With most FTC kits, the fasteners provided are technically bolts, because most parts are not threaded, even though they may refer to them as machine screws.

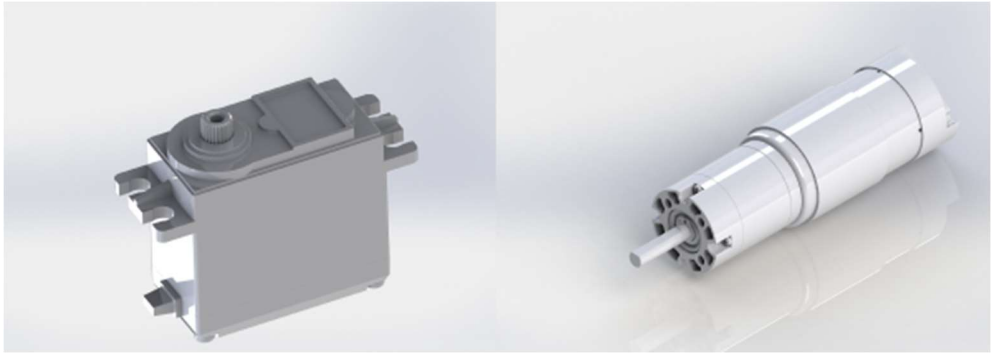

Figure 4: Comparison between rendered image of GoBilda Servo (left) and Motor (right).

Spacer – a component that is used to create a designated space between two components.

Shaft Spacer – a ring (often plastic) placed onto a shaft to create a space between two other components (often as a stabilizer).

Hub Spacer – a metal ring that is mounted onto multiple structural components to create a designated space between them.

Standoff – a threaded rod that creates a designated space between two structural components (usually two plates).

Intermediate

Adaptor – 1. An electrical component that may convert the electrical current to allow to incompatible parts to be connected.

2. A mechanical components that have a series of threaded pattern to allow components from different build systems to connect.

Bearing – a circular component that is often used as bushings to reduce friction between two components.

Belt – a continuous band of material that transfers motion from one pulley to another.

Bracket/Brace – they are often used interchangeably, meaning an intermediate part that connect something to a larger part at a specific angle.

Clamping Mount – a motor mount that utilizes the pressure provided from a set screw clamping the motors down.

Collar – a component that caps off a shaft, preventing shafting and its bushings to slip.

Coupler – 1. A link that connects two components together.

2. a component that acts as a collar.

Hub – 1. An electronic component that is the main onboard controller where all electrical motors, servos, and sensors are plugged into.

2. A coupling hardware that connects a circular component to a shaft (ex. A wheel to a d-shaft).

Kep Nuts – a special type of locking nuts that have a pattered locking washer on one side. When the washer is pressed against a hard surface, it prevents it from spinning and acts as a locking nut (though may not be as reliable).

Nylon Locks – a nylon ring lodged inside a nut that prevents the bolt from loosening itself. May provide some difficulties during installation.

Patterned Plate – a large plate that have a recurring pattern of holes.

Servo Horn – a component that connects to the servo's shaft and provide a certain platform to mount other components.

Servo Plate – a mounting plate which a servo sits in.

Set Screw - a screw that either clamps down or prevents motion of a mostly circular component (ex. Collar, couplers, clamp mounts).

Shaft

D-Shaft – a D-shaped shaft that may fit through any circular hole and uses its flat shape to secure components on it. It rotates exceptionally well, but it often gets mushroomed quickly.

Hex-Shaft – a hexagonal shaped shaft that is very easy to secure components on but often wear out quite quickly.

Square-Shaft – a square shaped shaft that is very wear resistant but are rarely used.

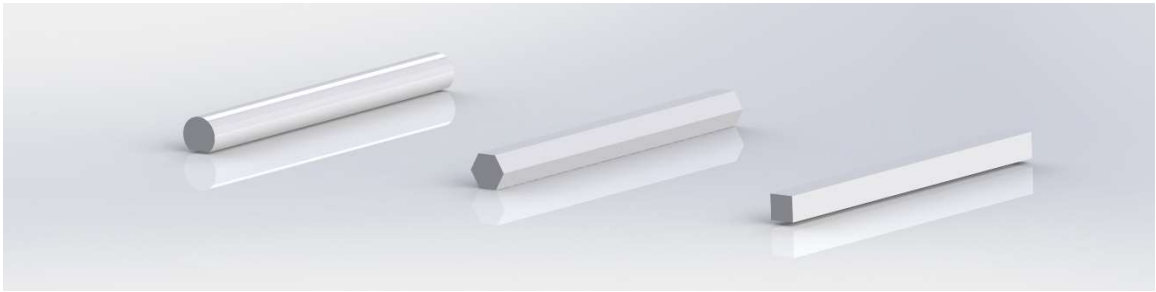

Figure 5: Comparison between D-shaft (left), hex-shaft (center), and square-shaft (right).

Mushroomed/Chewed up - wore out shaft that have a very rough surface pattern which may not rotate smoothly

Tubing – a tubular form of a material. The most common one in FTC is surgical tubing.

Washers – a metal ring that is often placed on a screw or axle to create less friction between two components, allowing better rotation.

Torque – a measurement of angular force.

Advanced

Actuator – a component that is responsible for moving a system stably.

Belt (O-Ring) – a circular belt that is designed to transform motion between multiple pulleys. They are not slip free; therefore, the motion may be discontinued, but they will not damage the drive components even under high load.

Bore/ Inner Diameter (ID) – it is the measure of a hole on the component. Usually used as a pair with outer diameter.

Cascading Slide – a sequential series of extrusions or linear motion rails that extends and retracts.

Cables and Pulleys – a system that consists of grooved wheels and cords that pulls these wheels in such as way that it allows the slide to extend and retract.

Winch – a system that converts small currents into rotational power with high torque. An example of its application is the cables from a tow truck.

Spool – a circular wheel that collects or released cables.

Damper Oil – a lubricant that can often be found in shock absorbers/dampers. Usually a compound of silicon, accessible and durable, though it may be hard to choose between all the different brands and viscosities. Might also be quite sticky for open joints.

Gears

Bevel gears – a group of gears that forms a right angle.

Spur – the dependent gear, often larger gear in the group.

Pinion – the drive gear, often directly connected to the driving motors.

Figure 6: An example of a bevel gear group.

Pinion gears – the general term for the smaller gear in a group of gears.

Gearing ratio – the ratio between various gears in a group. Generally, the larger the driving gear, the quicker the dependent gear may turn; the smaller the driving gear, the more torque the dependent gear may produce.

Grommet - a small, usually plastic components that is used to organize cables through holes.

Gussets – a 90-degrees triangular bracket.

Linear Motion – an object moves along a line, also known as one-dimensional motion.

Linkage - a mechanical component that transfers motion by establishing a link.

Outer Diameter (OD) - the measure of the external diameter of a circular object. Often used in consort with ID.

Example: A collar will have an OD and an ID.

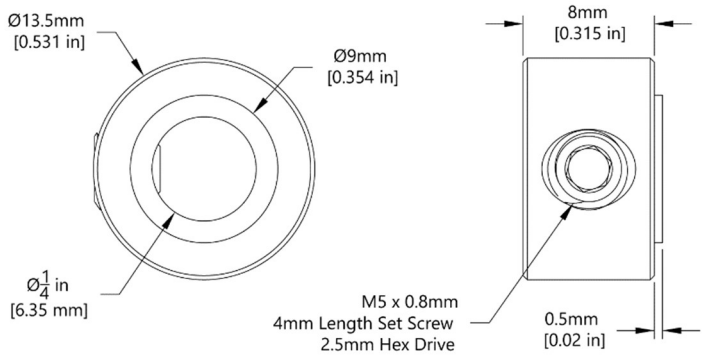

Figure 7: Diagram of an Actobotics Set Screw Collar [3].

The 13.5mm marking indicates the OD of the collar whereas the 6.35mm marking indicates the ID of the collar. The 9mm marking do not represent anything associated with the ID or the OD of the collar.

Roller Chain – this is a popular system to transmit rotational motion from point A to point B. They are often used in consort with sprockets, hence the term "sprocket and chain drivetrain".

Roller – the component that contacts the sprockets to transfer motion.

Pitch – the distance measurement between the two bearing pins on an outer link.

Bearing Pin – the pin that goes through the bush and connects the outer plates

Bush – the component that the roller sits on and allows individual links of the roller chain to rotate freely.

Outer Link – the link that connects two inner links together.

Inner Link – the link that allows the chain to rotate freely, as well as connect with the sprockets to transfer motion.

Master Link – an outer link that may be easily disintegrated and reassembled. It is there to simplify the customization of chains.

Chain Breaker – a tool that may push the bearing pins out of a roller chain to shorten the chains.

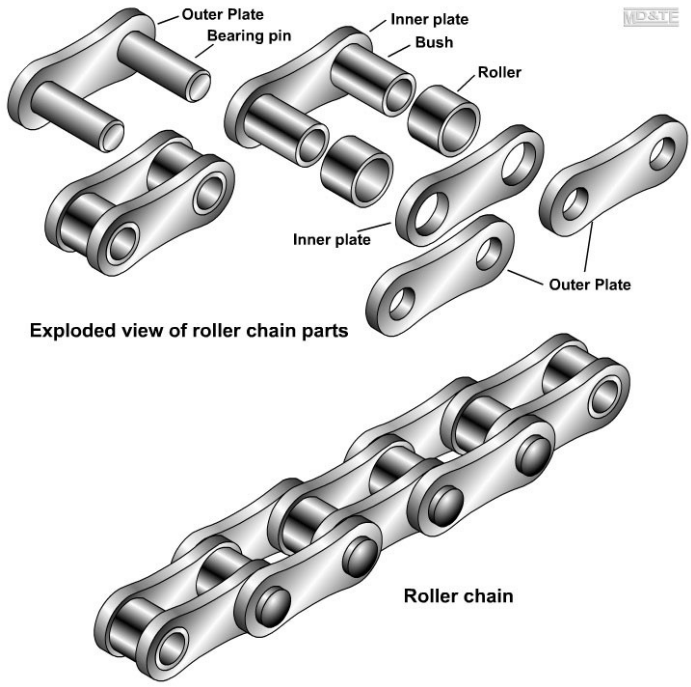

Figure 8: Exploded diagram of a roller chain [4].

Screw

Minor Diameter – the diameter of the screw without considering the threads, measures from root-to-root.

Major Diameter – the diameter of the screw with consideration of the threads, measures from crest-to-crest.

Pitch – the distance between two threads.

Pitch Diameter – the diameter of the screw with consideration of the threads, though it only measures the minor diameter and the threads from one side (root-to-crest).

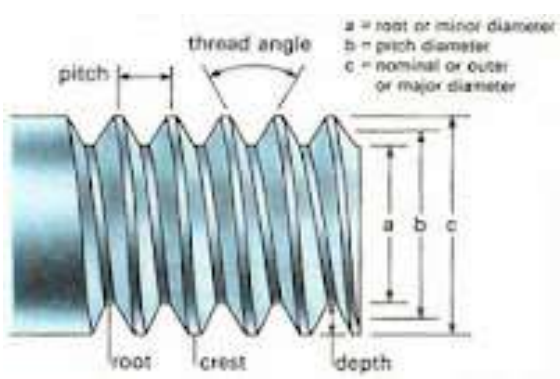

Figure 9: Diagram of the basic layout of a machine screw [5].

Galvanized/Zinc-Plated/Magnesium-Plated – Screws are sometimes dipped in molten metal, mostly zinc, to form a protective shell against corrosion. Some of these methods will give them a shine.

SKU Number – a number that is assigned to a component from a certain company. It is not universal, but they are often referred to for all technical files (especially for CAD).

Sprocket – a gear like circular component that allows a roller chain to transmit its motion.

> Driver – the sprocket that is directly driven by a motor and transmits its rotational motion to other sprockets via the chain mechanism.
>
> Driven – the sprocket whose motion is transmitted through the chain.

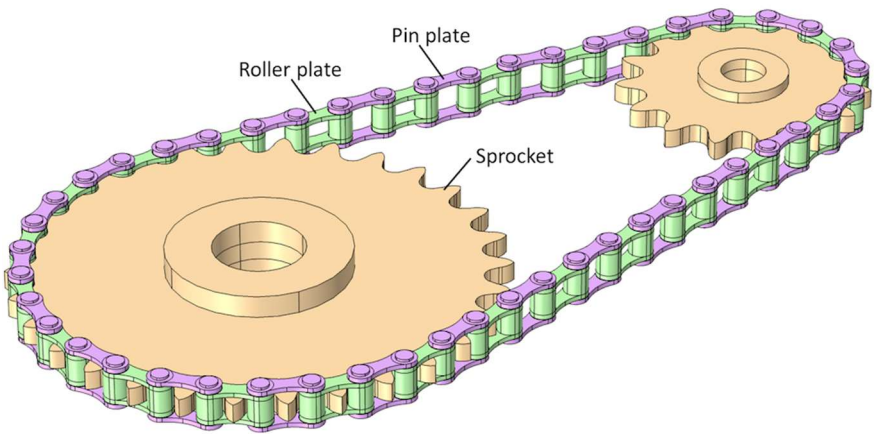

Figure 10: 3D assembly of a roller chain and sprocket system [6].

Tapped – to describe a hole that is internally threaded.

Timing Belt – a toothed belt that drives multiple pullies by transmitting rotational motion.

> Pulley – a grooved circular wheel that fits with a timing belt and.
>
> Idler – a pulley that do not have any tooth, spins freely, can help adjusting the tension of the mechanism.
>
> Belt Clamp – a two-piece plate that can connect two ends of a belt together, though they might prohibit some transfer of motion.
>
> Stretch-On – a timing belt that is elastic, may be installed by simply stretching it out.
>
> Tensioner – a mechanism that allows the pulleys to temporarily loosen to allow ease of belt adjustment.

Thread Lock/Loctite – a certain adhesive for screws

Threaded Rod – a circular rod that is often used to connect multiple linkages.

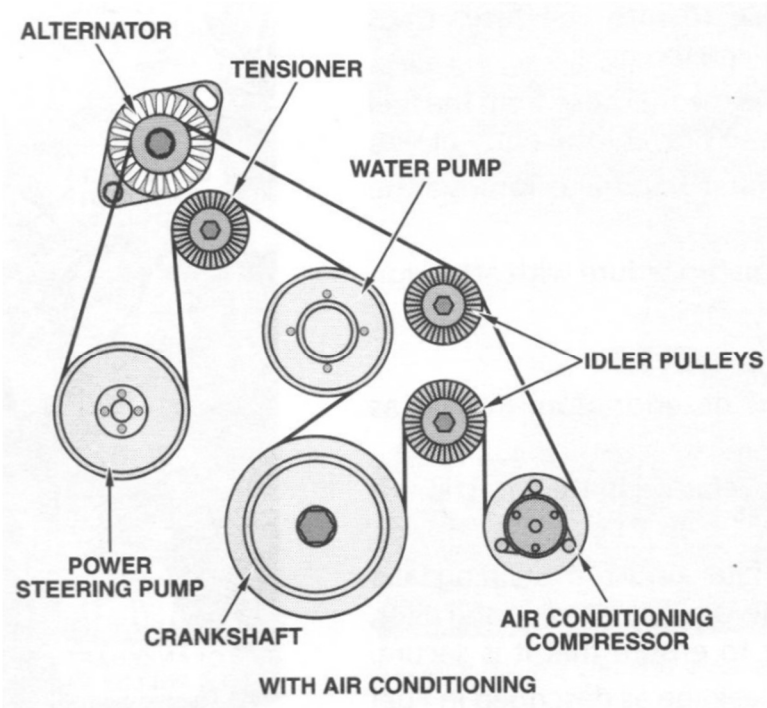

Figure 11: Diagram of a Buick V6 3800 engine's belt drive system [7].

1.2.2 Screw Size Guide (Intermediate and Advanced)

In FTC, different build kits may follow different unit system.

Build kits such as Andymark and Actobotics mostly uses the ANSI Inches(American National Standards Institute) system, often referred to as the imperial system.

However, kits such as GoBilda and REV Robotics has adapted the ISO (International Organization of Standardization[2]) system, often referred to as the metric system.

To add to the confusion, kits such as Tetrix decided to adapt a blend of metric and imperial.

We created these screw sizing diagrams and charts for you to differentiate between these confusing systems (see Figure 12).

In addition, if you still struggle with these screw sizes, you can easily purchase screw gauging kits that will sort those for you with ease.

1.2.3 Tools (Beginner)

Allen Key – a L-shaped screwdriver specifically for hex head screw.

Base Vice – a vice that is often attached to a workbench, very secure, used to eliminate any movement from components when you work on them.

Caliper – a special measurement tool that is designed to accurately measure the diameters of certain things.

[2] but some may argue that these build kits obey the ANSI Metric system

Center Punch – a tool where you make a dent on the material before you drill them, a simple way to make sure you drill the correct place.

Computer-Aided Design – a tool that may allow you virtually construct the robot and test out its mechanical properties, as well as functionality to a certain degree.

Drill Bits – attachments of drill press and impact driver, usually have a filleted triangular end that can be secured by the chuck (the part where all attachments connect with the drill).

Drill Press – a machine designed to drill perfectly vertical holes on components.

Hacksaw – a saw with a thin band as the blade, often used in metal work.

Pliers – a pair of diagonally-mounted pincers designed to grip on something.

Ratchet (Socket Wrench) – a size specific mechanical device that is used in fastening nuts or bolts by attaching a socket to it.

Screwdriver – a type of tool that is designed to fasten screws.

> Phillips – a cross-shaped head that is very commonly used for machine screws. They are also quite resistant to being cross threaded.
>
> Flat – a slot-shaped head that is commonly used. They are very resistant to being cross threaded, although they may be difficult to install.

Screw Size Chart

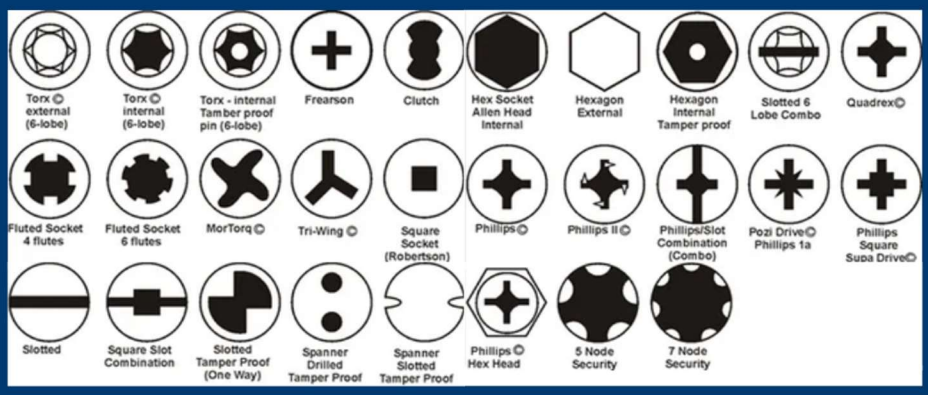

Basic Terminologies

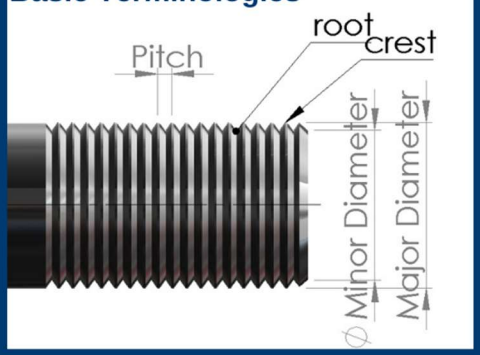

Size	Nominal Major Diameter Imperial		
	Decimal (in)	Nearest Fractional	Decimal (mm)
#0	0.06	1/16"	1.524
#1	0.073	5/64"	1.8542
#2	0.086	3/32"	2.1844
#3	0.099	7/64"	2.5146
#4	0.112	7/64"	2.8448
#5	0.125	1/8"	3.175
#6	0.138	9/64"	3.5052
#8	0.164	5/32"	4.1656
#10	0.19	3/16"	4.826
#12	0.216	7/32"	5.4864

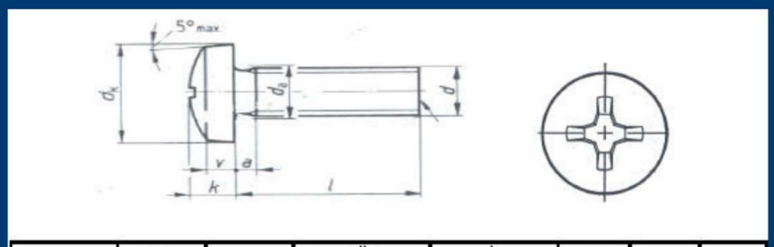

d	a (max)	da (max)	dk		k		r (min)	rf	v
			min	max	min	max			
M1.6-0.35	0.7	2.1	2.9	3.2	1.18	1.42	0.1	3	0.8
M2-0.4	0.8	2.6	3.7	4	1.48	1.72	0.1	4	1.1
M2.5-0.45	0.9	3.1	4.7	5	1.88	2.12	0.1	5	1.3
M3-0.5	1	3.6	5.7	6	2.28	2.52	0.1	6	1.6
M3.5-0.6	1.2	4.1	6.64	7	2.58	2.82	0.2	7	1.9
M4-0.7	1.4	4.7	7.64	8	2.95	3.25	0.2	8	2
M5-0.8	1.6	5.7	9.64	10	3.65	3.95	0.2	10	2.5
M6-1.0	2	6.8	11.57	12	4.45	4.75	0.25	12	3
M8-1.25	2.5	9.2	15.57	16	5.85	6.15	0.4	16	3.7
M10-1.5	3	11.2	19.48	20	7.32	7.68	0.4	20	4.8

FIRST

MEADOWRIDGE SCHOOL

For More information, Please Refer to www.entradoxrobotics.com

Figure 12: Screw Sizing Poster [8-10].

Hex – a hexagonal shaped head that is very commonly used in machine screws. They are easy to cross thread but can also be much easier to use. They are also available in a large selection of sizes.

Ball Peen – a circular head that allow better rotation and prevents cross threading, although they may not provide good mechanical advantage for fastening or loosening.

Flat Head – an end that is consistent with the cross-sectional shape of the tool. They may provide better mechanical advantage and are generally slip free, although smaller flat head hex screwdrivers are easy to be damaged.

Wrench/Spanner – a mechanical device that is used in fastening nuts or bolts by using its manufactured patterns[3].

1.3 How to Read a Vector Drawing (Intermediate and Advanced)

In engineering, vector drawing refers to detailed schematics that indicates the dimensions and shapes of certain things.

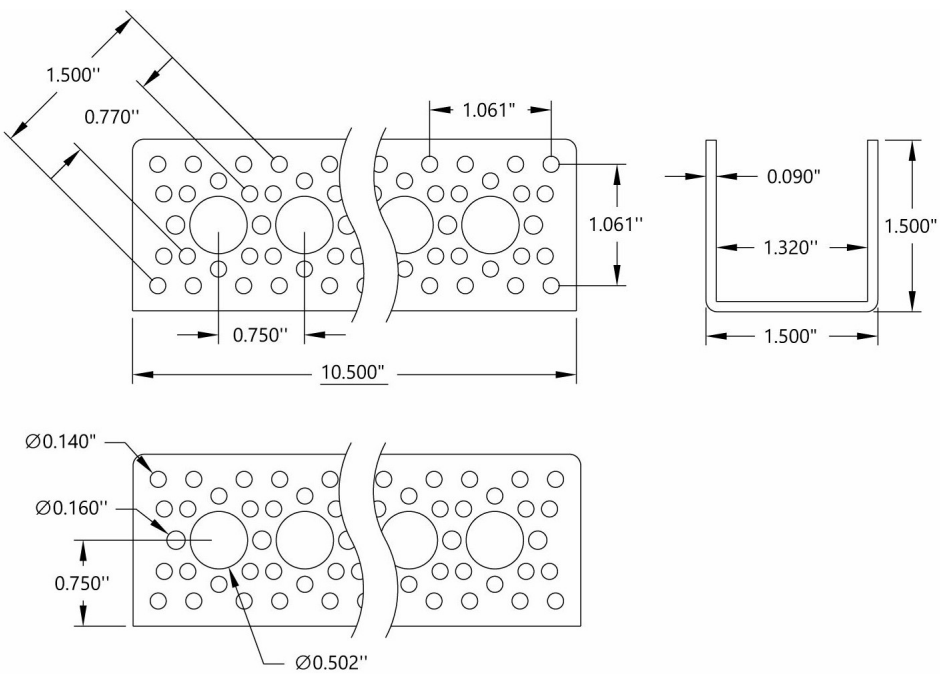

Figure 13: Vector drawing of Actobotics U-Channels [11].

For example, figure 13 allows you to see the distance between certain holes of a U-Channel. As a note, certain symbols are often used.

[3] *Quick note: In American English, wrench and spanner are used interchangeably. However, they are distinct from each other. Wrench is specifically referring to adjustable wrenches where spanners are size specific. Therefore, most wrenches used in FTC are technically spanners.*

For example, “ " ” and “ ’ ” are often used to indicate inches and feet, respectively. In addition, wavy or zig-zagged lines are often used to indicate that a certain part of the model do not have any useful dimensions marked on and will be excluded from the drawing to save space.

When it comes circles, vector drawings can be quite confusing. “Φ” is often used to symbolize diameter where as “R” or “r” notates radius. Most circles will be notated with diameter whereas circular arcs will usually be measured in radius. In addition, notating the dimensions between a circle may be quite convoluted. Therefore, as a convention, all distance involving circles or arcs will be measured at its center vertex.

2 Electronics Guide and Resources

In FTC, all teams must use legal control components, which are all REV Robotics based system. Each team may have no more than 12 servos and 8 motors, connected to 2 or less hubs. To communicate with the on-bot hubs, a wireless connection must be established with them.

On each functional robot, there must be a Robot Controller (RC), and a Driver Station (DS) must be wirelessly paired with RC. During each match (excluding the autonomous portion), teams are free to use DS to communicate with RC manually.

The following section will give you an overview regarding which legal controller should you choose and how to implement them into your robot.

2.1 Hub Comparison (For New Teams)

There are a variety of potential pairings that both FTC allows and you may easily acquire via a variety of channels.

This is beneficial because it allows you to easily access the parts required and have the flexibility to get parts that may be the best fit to your robot.

This might also hinder your progress because you might struggle to work with a new system down the line and you might be overwhelmed by the number of choices you have.

Since we once were a new team too, we aim to make things as simple for you as possible.

The following subsections will more closely outline each component and their properties.

We would like to offer help whenever you might need. You can always email us (see the acknowledgement section) or contact us through any other mean of communication. We will try our best to help as much as possible. If you encounter any issue with lack of parts, we may also help, as our school has nearly a dozen of teams with spare hubs for most of them.

Electronic Hubs Comparisons

In FTC, all teams must use legal control components, which are all REV Robotics based system. Each team may have no more than 12 servos and 8 motors, connected to 2 or less hubs. To control your robot, you must have a Robot Controller (RC) strapped physically to your robot, and a Driver Station (DS), although it does not have be the ones sold by REV Robotics.

Connection Method	Control Hub to Phone	Control Hub to DS	Expansion Hub to Phone	Expansion Hub to DS
Price (Without Discount)	Around USD 450 (depending on the phone)	USD 500	Around USD 500 (depending on the phone)	Around USD 550 (depending on the phone)
Connection Stability	Good	Good	Less than Optimal	Decent
Phone Necessity	1	0	2	1
USB Connectivity (RC)	Full IO	Full IO	Single port to phone (RC)	Single port to phone (RC)
USB Connectivity (DS)	Single expandable port	Full IO	Single expandable port	Full IO
Operating System	Android	Android	Android	Android
Block Programming Support	Yes	Yes	Yes	Yes
OnbotJava Support	Yes	Yes	Yes	Yes
Android Studio Support	Yes	Yes	Yes	Yes

Descriptions

REV Robotics Expansion Hub：A very basic electronic controller that may connect with RC and other on-bot Rev Robotics hubs.
REV Robotics Control Hub：A control hub can directly pair with DS. Similar like Expansion Hub except it also acts as an RC.
Driver Stations: A phone-like electronic controller that utilizes the android system can offers USB connectivity.
Phone Necessity and Connectivity: In a REV Robotics control system, the configuration of your Control Hub should always be Hub 1 (Hub 2 should always be an Expansion Hub). If you have a Control Hub, at max, you will need one phone.

Other Important Notes

Phone Legality: FTC only allow a certain number of phone models to be used in matches. They are: Motorola Moto G 2nd Generation, Motorola Moto G 3rd Generation, Motorola Moto G4 Play, Motorola Moto G5, Motorola G5 Plus, Motorola Moto E4, and Motorola Moto E5 Play. Any other phone model will be deemed illegal.
You may purchase these models via external channels or through FIRST directly.
Otherwise, all other necessary parts may by purchased through REV Robotics or FIRST.

If you wish to purchase any other electronic controllers, check the following document to confirm their legality (note this is the 2021-2022 parts list, it may be updated in the following seasons):
https://www.firstinspires.org/sites/default/files/uploads/resource_library/ftc/legal-illegal-parts-list.pdf

FIRST MEADOWRIDGE SCHOOL

For More information, Please Refer to www.entradoxrobotics.com

Figure 14: Hub Comparison Chart.

2.1.1 FTC Legal Hubs

FTC has restricted all robots to use robot controllers from REV Robotics. In past seasons, only expansion hubs are allowed. However, as of the past season, 2020-2021 Ultimate Goal, control hubs have been legalized. Therefore, wireless connectivity between RC and DS no longer solely relies on phones.

2.1.2 REV Robotics Expansion Hub

The Expansion Hub is a very basic electronic controller that may connect with RC and other on-bot Rev Robotics hubs. It can be connected with a phone or another hub via a type-A USB cable.

2.1.3 REV Robotics Control Hub

The Control Hub is essentially an Expansion Hub except it also acts as RC. Therefore, instead of installing a phone as RC, This hub is around 1.5 times more expensive than the Expansion Hub, but the lack of phones may reduce the overall control system cost and improve the overall cleanliness of the setup. In addition, control hubs may establish more stable connection and is easier to manage due to the lack of wired connections.

2.1.4 Driver Stations

Driver Stations from REV Robotics is different from DS, it is a phone-like electronic controller that utilizes the android system can offers USB connectivity. This is essentially a phone operated DS, except it is much more stable. They are often sold as a bundle with the Control Hub.

2.1.5 Phone Necessity and Connectivity

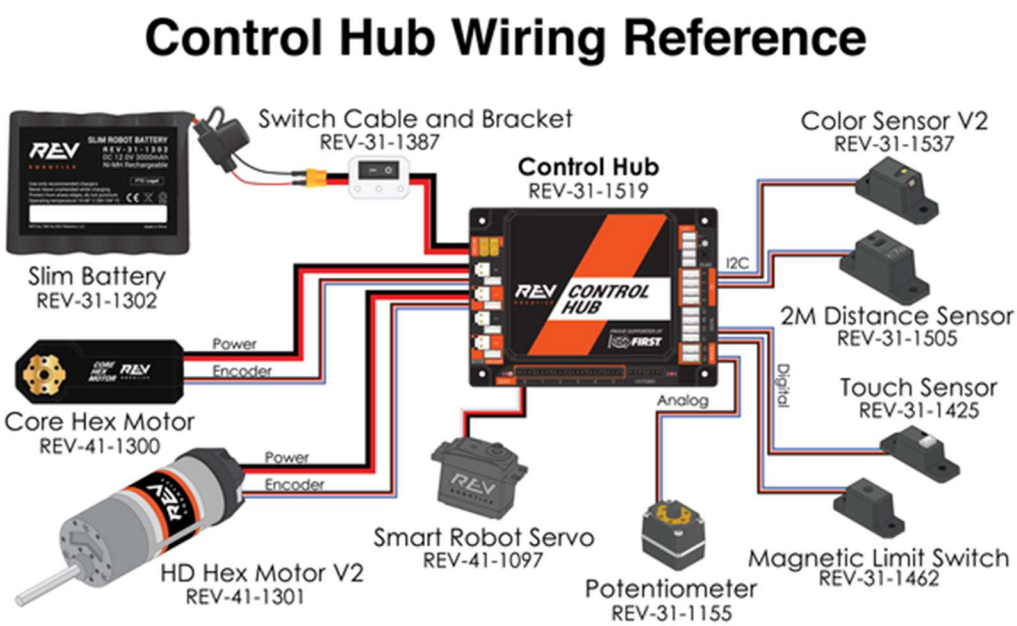

Figure 15: Control Hub connectivity diagram from REV Robotics [12].

If you are pairing a Control Hub with a Driver Station, then phone is not necessary for you at all. However, many teams do pair their Control Hub with a single phone. In that case, your phone must be legal for FTC. Please refer to the following document to confirm.

In a REV Robotics control system, the configuration of your Control Hub should always be Hub 1 (Hub 2 should always be an Expansion Hub). If you have a Control Hub, at max, you will need one phone.

https://www.firstinspires.org/sites/default/files/uploads/resource_library/ftc/legal-illegal-parts-list.pdf

If you plan to use an Expansion Hub as Hub 1, you will need a pair of phones to compensate the lack of wireless connection offered by your primary hub. In that case, both phones must be confined to the legal parts documentation.

To pair the two phones, download the FTC RC app on one and the DS app on the other. RC will have to be mounted on your robot. They will be wirelessly connected by Wi-Fi.

Pairing a phone/Driver Station with the control hub is a similar process. Simply download the FTC DS app on it and wirelessly pair it with a control hub.

Please consult the following guide from FIRST for step-by-step demonstration:

https://docs.revrobotics.com/control-hub/

We would highly suggest using Control Hub because it establishes a more stable connection.

2.1.6 Potential Issues and Troubleshooting

The most common problem is losing connection between RC and DS, and usually the issue is caused by a wire disconnecting.

Our team have yet to experience any issues with the Control Hub and Driver Station. The general consensus is that they are a more stable and reliable system.

However, the same cannot be said with expansion hub and phones. Due to the addition of wires, these connections can be easily lost during collisions. In addition, DS often struggle to stay connected with the controller as the cables come off. Therefore, these are all issues with using a phone albeit it is cheaper.

To tackle this disconnection issue, some examples outlined in the official wiring guide include 3D print connectors. In addition, in the past competitions, other teams have pointed out that duct tape can be a short-term solution.

Figure 16: Official Suggestions from FTC 2021-2022 Wiring Guide, using REV Robotics Connection Enhancer (top) or a 3D printed connector (bottom) [13].

In addition, the following forum is very helpful:

https://ftcforum.firstinspires.org/forum/ftc-technology?156-FTC-Technology=

Another source of support is to reach out to local teams or the event organizers as they may know a better resource to help you.

FTC teams are extremely friendly, so please do not hesitate to ask for help.

If you do encounter an issue, our team would be delighted to help:

2.2 Hub Mounts Guide

If your build system is not REV Robotics, then you may encounter many issues when mounting your Control Hub and Expansion Hub(s). Here, we will discuss the available options to securely mount your hubs into your robot construction.

2.2.1 Off-Shelf Products (Beginner)

Depending on your build system, their parent companies may sell pre-manufactured hub mounts that allow you to easily adapt to REV Robotics.

For example, ServoCity sells Actobotics Expansion Hub adaptors.

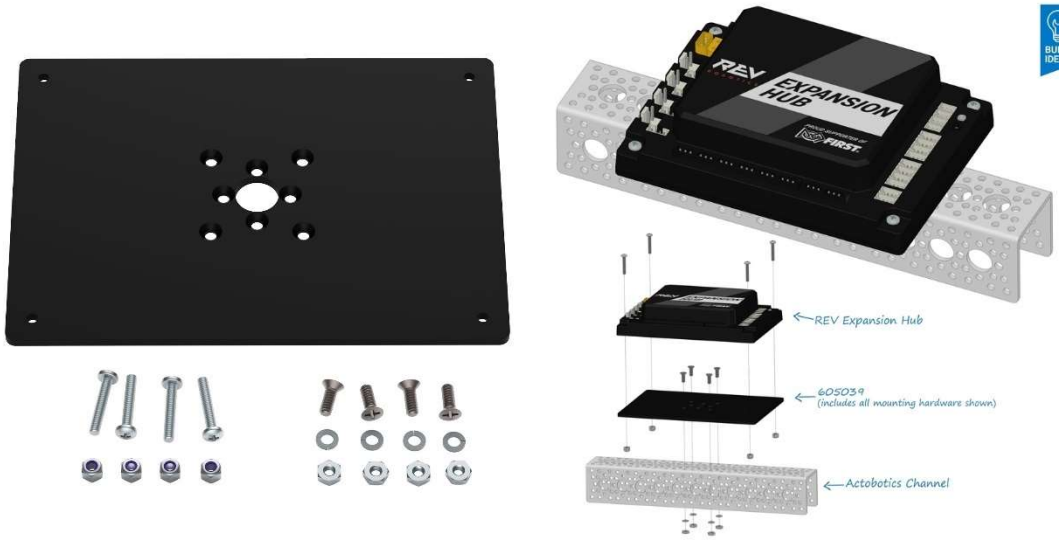

Figure 17: Diagram of ServoCity's Expansion Hub adaptors [14].

If your build system does not carry an adaption component, chances are either the mounting holes are compatible, or the kit already provided such product.

For example, GoBilda's slotted hole patterns on their channels can easily be adapted to these hubs; Tetrix's channels and mounting plates are directly compatible with these hubs. However, you must know that mounting the hub to a metal component may not be a wise choice because you should ground your robot to your frame and doing so may eliminate part of the effects of grounding since the frame is already contacting your electrical components.

However, the downside of purchasing a hub mount is that the customizability is limited. You might not be able to mount your hub at a desirable location.

2.2.2 Custom-Made Hub Mounts (Intermediate and Advanced)

Custom-made hub mounts are slightly harder to utilize mostly because CAD is required. However, the customizability that comes with it is very much worth the effort.

Usually, teams use CAD and 3D printing to make hub mounts. REV Robotics and other build systems have kindly provided vector drawings of their hubs and structural beams so you can easily make a hub. If you cannot find it directly from their website, the official FTC forum and your local event providers are your best resources since teams in the past probably had already asked the same question.

Another benefit from these mounts refers to the topic of grounding. Because plastic is an insulator, therefore, it makes grounding the electronics to the frame more effective due to the lack of direct contact between the electronics and the frame.

These parts are extremely easy to make. Both CAD and 3D printing in the present day is easy access for most teams. In section 4, we will discuss the issue to which free CAD software to choose and how to learn the necessary skills in a short period of time. 3D printing in the past few years gained prevalence. For example, there are a few Maker Spaces in the lower mainland and every

one of them carry a decent 3D printer. In addition, if your team plan to do a lot of 3D printer, a budget option from any online electronic store will cost no more than $300 and is very easy to maintain.

2.3 Programming

Programming is an integral part of FTC. In order to gain control of the robot, in this section, we will look into how RC and DS communicates and how we can take control of this communication.

2.3.1 Basic System Overview

FTC uses REV Robotics controllers, meaning you must utilize systems that REV permits. Regardless of the form of your RC, you will have to manually pair it wirelessly to your DS, albeit some are easier than others. Therefore, we may take advantage of this connection between RC and DS to directly communicate with DS.

All FTC legal DS utilizes the Android operating system; therefore, we may use any android supported coding environment (IDE) to control the robot. In addition, FTC have created Onbot IDEs as well, although they are not as advanced.

2.3.2 OnbotJava Versus Block Programming versus Android Studio

In this section, we will present an overview of each programing system and their strength and weaknesses. Please note that other IDEs are available, but we will not be covering them due to the lack of support from FTC.

Block Programming is by far the easiest of these three methods because it eliminates the necessity of learning Java. In addition, block programming is intuitive, easy to use and configure, and much more user friendly than both OnbotJava and Android Studio.

As its name suggests, Block Programming IDE is very similar to Scratch and Lego Mindstorm, making it hardly a step-up from FLL. However, you are confined to the blocks they have and you may not be able to achieve some complicated tasks.

OnbotJava and Android Studio both support Java, and neither of them are very easy to use. That said, our measure of ease-of-use is not limited to basic connections, but also the experience of troubleshooting and testing the program functionality using these IDEs.

OnbotJava is considerably easier to use since it may be accessed through the browser via a designated IP address. However, its limit is that you must maintain connection throughout the process of programming the robot. In addition, the troubleshooting support from them is borderline appalling, only providing the location of error and can be extremely confusing for beginners.

Despite the usability of OnbotJava, many teams use this system because it is much easier to use than Android Studio and you do not need to download any libraries from FTC.

However, If you are looking to invest a vast amount of time on autonomous programs, Android Studio is the preferable choice. Unlike OnbotJava, Android Studio will rely on local storage and may require extensive use of the terminal to store and access files. However, it is much easier to

manage, and files can be accessed simultaneously by multiple coders, speeding up the progress substantially.

For example, you may manage files through Git and access many open-source libraries that OnbotJava simply do not have access with.

That said, we must acknowledge that many teams spend weeks trying to set up Android Studio and eventually turn back to use OnbotJava.

Choosing between these three options is a case dependent process. To generalize this process, we do not suggest using Android Studio even for advanced teams simply due to its time-consuming nature. In addition, through past seasons, we found that using Vuforia with OnbotJava is significantly easier than integrating it into Android Studio. However, if your team have multiple very capable coders, Android Studio will be easier to manage.

If you are a beginner team, we highly suggest trying out Block Programming and OnbotJava before choosing. From past experience, we tried to work with Android Studio but eventually gave up because it is a huge pain to work with and OnbotJava is just much easier to set up.

Please do not choose the coding system basing on online resources because FTC have kindly created a library of step-by-step guides for all three of these systems.

2.3.3 Programming Resources

FTC Java Documentation:

https://ftctechnh.github.io/ftc_app/doc/javadoc/

Block Programming Support:

https://www.firstinspires.org/sites/default/files/uploads/resource_library/ftc/blocks-programming-manual.pdf

OnbotJava Support:

https://www.firstinspires.org/sites/default/files/uploads/resource_library/ftc/onbot-java-guide.pdf

Android Studio Support:

https://www.firstinspires.org/sites/default/files/uploads/resource_library/ftc/android-studio-guide.pdf

Android Studio Project Downloads:

https://github.com/FIRST-Tech-Challenge/FtcRobotController

REV Robotics System Management Guide:

https://docs.revrobotics.com/rev-control-system/c

3 Build Kit Overview, Hardware Guide, and Resources

In the following section, we will discuss build materials, hardware, and robot construction. If your team have already purchased a build kit, feel free to skip to section 3.2.

3.1 Build Kits (Beginner)

In FTC, most teams use build kits, even though FTC is quite open with materials. REV Robotics, Tetrix, Actobotics, and GoBilda are the four most common companies. In the following section, we will discuss how these kits compare against each other.

3.1.1 REV Robotics

REV Robotics is the official electronic provider of FTC, they also make a very versatile kit for teams. Their main building materials are aluminum extrusions and plastic brackets. That makes a very light, but not very sturdy robot. For the current 2021-2022 season, they will be a good fit. However, moving forward, they may be an obstacle to constructing a more reliable bot. But, on the positive side, they have a large inventory of components that may upgrade your current inventory. They are also highly compatible with other build systems.

Figure 18: Overhead Manifest of the REV Robotics V3 Build Kit [15].

3.1.2 Tetrix

Tetrix is the direct opposite of the REV kits. Their kit is neither light nor versatile, but the structural components of a Tetrix robot is considerably stronger than REV Robotics. They also come with very good quality wheels and brackets. It must be said that Tetrix is by no means the cheapest (both with and without discounts). In addition, the Tetrix kit has the least number of different parts and they do not have a wide range of possible upgrades.

Figure 19: Manifest of the Tetrix Max FTC Competition Set. [16]

3.1.3 Actobotics

Actobotics is a very interesting case. Nearly all their components are aluminum; they have the widest range of parts to choose from; they are one of the cheaper kits with discount… All of that is great, except they are fully committed to using ANSI Inches parts, making them incompatible with most other kits. Although they do make a wide range of adaptors, those are pretty expensive.

Figure 20: Manifest of the Actobotics FTC Competition Build Kit [17].

3.1.4 GoBilda

GoBilda is very similar to Actobotics. In fact, ServoCity, their parent company, is the main seller of both brands. Their only major difference lies in units – where Actobotics is committed to ANSI Inches, GoBilda uses ANSI Metric. It is also slightly more adaption friendly than Actobotics because of their slotted channels. In addition, as a setback,

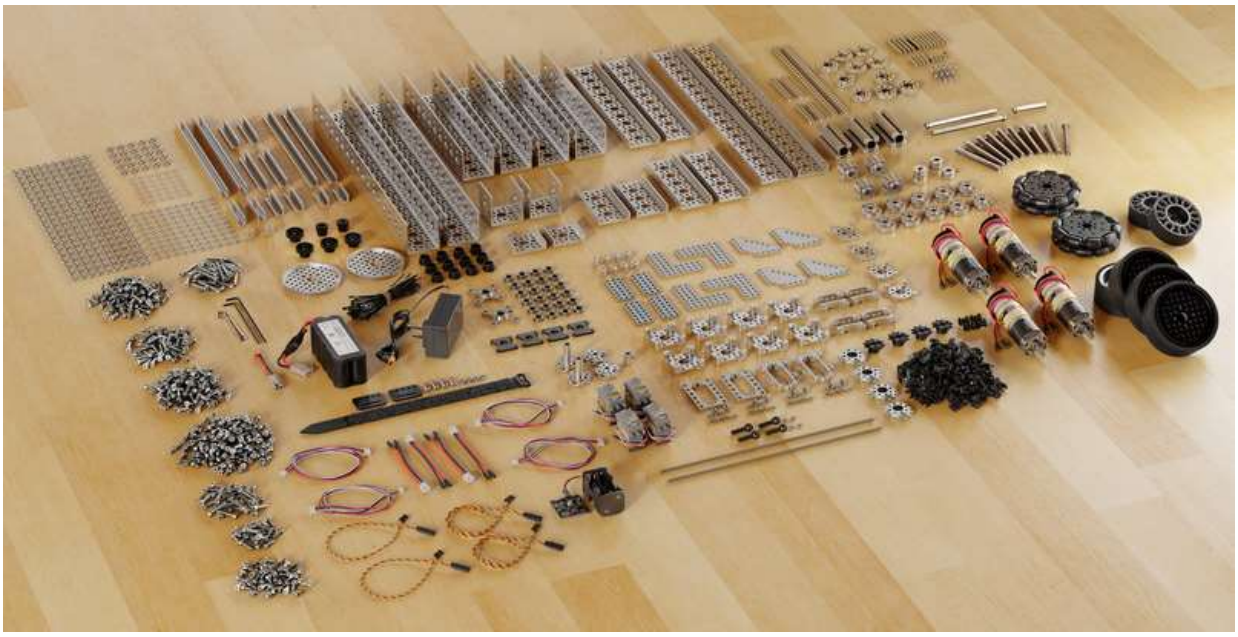

Figure 21: Manifest of the GoBilda FTC Master Build Kit [18].

3.1.5 Other Alternatives

In most cases, teams will not use a full kit from another company but purchasing separate parts from them. Some common ones consist of VEX, AndyMark, MISUMI, etc.

VEX do make a separate FTC kit, but it is largely underpowered and more expensive than the ones listed above.

AndyMark makes a lot of customizable tile-runner kits, but they do not sell them with hardware to build the attachments on.

MISUMI is a stranger case. They are not a robotics company; instead, they sell automation components. Their linear roller railings are much better than all other cascading slide kits on the market, though it makes them a bit more expensive and very hard to maintain.

Although there are more companies that makes such components, they are very uncommon in FTC.

3.1.6 Kit comparison

Build Kit Comparisons

Kit Name	REV Robotics	Tetrix	Actobotics	GoBilda
Price with Discount	552.5 USD	567.96 USD	579.99 USD	579.99 USD
Default Unit System	ANSI Metric	Mix of ANSI Metric and ANSI Inches	ANSI Inches	ANSI Metric
Number of DC Motors	2	4	4	4
Number of Other Motors	2	0	0	0
Number of Servos	4	4	4	4
Primary Structural Material	Extrusions	Channels	Channels	Channels
Secondary Structrual Material (Metal)	Channels	Patterned Plates	Extrusions, Beams, Patterned Plates	Extrusions, Beams, Patterned Plates
Total Component Counts	1393	824	1321	1548
Total Metal Component Counts (Excluding Fasteners)	119	190	211	204
Primary Screw Size	M3	#6-32	#6-32	M4
Kit Provided Nut	Nylon Locking Button	Kep	Nylon Locking Button	Nylon Locking Button
Gears	Plastic	Metal	Metal	Metal
Sprockets	Acetyl	N/A	Acetyl	Metal
Chain	Metal, #25	N/A	Metal, #25	Plastic
Pulley	N/A	N/A	N/A	Metal and Plastic
Belt	N/A	N/A	N/A	Timing Belt
Traction Wheel	10	4	4	4
Omni Wheels	2	4	4	4
Mecanum Wheels	N/A	N/A	N/A	N/A
Control Electronics	N/A	N/A	N/A	N/A
Upgradability	Good	Okay	Great	Great

Properties

REV Robotics: A wide selection of parts, very versatile, good upgradability and adaptability, but not the best at quality.
Tetrix: Good quality, but not the best at upgradability and adaptability, and quite expensive. In addition, some parts may wear out quite quickly.
Actobotics: A wide selection of quality metal parts, great upgradability, decent price, but struggle to readily adapt to other kits.
GoBilda: A wide selection of quality parts, great upgradability, decent price, but uses strange screw sizes and motor gear ratios.

FIRST MEADOWRIDGE SCHOOL

For More information, Please Refer to www.entradoxrobotics.com

Figure 22: Comparison Chart Between the Most Common Build Kits in FTC.

3.2 Hardware

In general, hardware refers to the fasteners, gears, as well as tools. In the following section, we will look into which type of hardware to use for constructing the chassis and attachments of your robot, as well as what to use to connect them together.

3.2.1 Fasteners

Fasteners in FTC refers to the screws, nuts, washers, as well as tapped plates (because they act like a nut). When selecting which type of fastener is most effective for your robot, please consider the following questions: what is the purpose of using this fastener? Is there an alternative form of fasteners that may work better in this case?

3.2.1.1 Screws and Bolts

Screws in FTC is crucial because they are the key prospect that is keeping everything together. There are hundreds if not thousands of different types of screws out there with different sizing mechanism, different patterns, as well as a range of various dimensions. To choose from this chaotic cluster is extremely challenging. Thankfully, FTC build kits has simplified this issue.

Most kits follow either the ANSI Metric or ANSI Inches system, meaning they are internationally standardized, allowing you to purchase that exact size from any hardware retailer if needed. In addition, all FTC screws are either button head, hex head, Philip head, or socket screws (If you have trouble comprehending these terms, please refer to Figure 12 or our Screw Sizing Poster via our website), which are very common, and you can buy the appropriate tools easily.

However, if you wish to purchase additional screws, make sure to check the sizes of screws provided by your build kit. Usually, regardless of the tools required to fasten them, all ANSI standard screws with the correct dimensions will be compatible.

One issue with aftermarket screws is they may be easier to prevent cross-threading, especially if it is a Philip head screw. In the past, we have struggled with some preinstalled servo horn fasteners because they are aluminum and highly malleable. In the end, many of which are drilled out and replaced with stainless steel screws.

Something else to keep in mind is the outer coating of screws. Many companies advertise their fastener as anti-corrosion, but only the ones dipped in electrolyte solutions may achieve their advertised lifespan. Since FTC only use small machine screws, we suggest zinc or magnesium plated fasteners rather than galvanized because galvanizing may cause minute deformation in the threads, which has a much more significant effect as the major diameter of the screw gets smaller.

We suggest simply using the kit provided screws as much as possible. However, if you do need to purchase additional quantities, we suggest sticking with the same retailer as your build kit.

If your retailer does not provide the parts you need, another brilliant source is your local hardware stores or automation retailers. In most cases, they have a large inventory of fasteners. The benefit of these locations is they are easy to be returned if you do make a wrong purchase, as well as in-person assistance from their clerks.

On the off chance that all these above sources are unavailable, our favorite hardware retailer (not strictly FTC related) is McMaster-Carr[4]. They are an online retailer that may provide you with any component that you desire, albeit the shipping time is quite long.

3.2.1.2 Nuts

Nuts are critical to robot construction; they are the main components that keep your structural components in check. Due to this reason, you should be extremely careful when choosing nuts.

In FTC, some build kits such as REV Robotics provide wonderful nuts that are both nylon locking and can slide into their extrusions so they will not spin around when you try and fasten it. However, not all build kit provider is this kind to teams.

The best example is Actobotics. Nylon locking nuts are brilliant, they do not come off easily and are more reliable. However, the ones provided by Actobotics are extremely painful, namely the locking rings are too thick, increasing the resistance to an almost unmanageable level. In addition, they do not provide any wrenches either, meaning you might need to make additional purchases[5].

Another example of faulty nut is Tetrix. Their kit comes with a set of nuts called kep nuts, meaning they have a locking pattern on them that can fold onto the metal as you fasten them. They are wonderful to install, but they are often back themselves out of the threads due to the lack of locking features.

There are a few ways to tackle this problem. In summary, nylon locking is the best option to prevent this from happening. But if one is unavailable, using a screw with the same major diameter but a smaller pitch may help. This essentially makes the threads clamp together with each other, creating more friction so that the nuts cannot back themselves out. However, this may also increase the wear on the screw.

Another solution is to use thread locks or Locktite. They are adhesives that essentially glues the screw to the nut. The benefit of using them is that you can still easily take the screws out (albeit it will be slightly harder). However, it also increases wear and may not be much cheaper than replacing all the nuts[6]. In addition, be careful when choosing a thread lock for your robot, because different color usually signifies different strength and using a very strong thread lock may permanently damage your screws.

3.2.1.3 Washers

Washers, as fasteners, are often forgotten. However, they are crucial to keep the motion of your rotary components nice and smooth[7] by creating a slight gap between the rotary and the structural

[4] https://www.mcmaster.com/
[5] Something that is even more peculiar is that the thread nominal diameter of the nut is imperial, but it does not fit into any imperial socket nice and snuggly. Our suggestion is to use an 8mm ratcheting wrench to hold it down.
[6] Our team personally uses the blue Factory Team Thread Locks. You can purchase them via this website. Alternatively, your local RC shop will carry an equivalent.
[7] Please do not confuse them with bushings. Bushings keep them rotating smoothly by reducing the friction between the component itself and the cylindrical surface of your structural components whereas washers simply prevent the collars of your rotary component from rubbing the flat surfaces of your structural components.

components[8]. They are also not size sensitive, as long as the ID is larger than the major nominal diameter of your fastener and the OD is small enough for it to not block more screw access points.

3.2.1.4 Tapped Plates

Tapped plates are wonderful components. They essentially replace nuts, making building much easier and creating a much cleaner overall resultant. However, they are expensive, and you should be careful with them.

Firstly, they usually are more expensive, and they might not match your robot's mounting patterns. Secondly, they almost never have locking features. And finally, most build kit manufacturers make a lot of these components, but they are almost never sold with your build kits.

A potential solution is to make your own tapped plates since cutting and tapping sheet metal is neither hard nor expensive, albeit it may be time consuming.

3.2.2 Chassis

Chassis is arguably the most important part of your robot. They must be strong, flex-free, versatile, and preferably light. In summary, a chassis may make or break your robot design.

Since it is an integral part of your robot, here are our suggestions to building a successful chassis.

- Use plenty of structural components, especially beams and channels.
    - Avoid pattered plates because they might bend under high load.
- Create plenty of room for mounting attachments.
- Make sure all electronics are mounted stiffly on your robot, and grounded.
- Avoid plastic components, especially 3D printed parts.
- Use proper mounts for all dynamic components.
- Allow sufficient ground clearance.
- Make sure no rotary and dynamic components are rubbing on any static components.
    - Add washers, spacers, or lubricants to mitigate these issues.
- Make sure your powertrain is reliable and relatively easy access in case anything goes wrong.

3.2.3 Attachments

Although chassis is the most integral part of the robot to ensure its functionality, attachments are by far the most important to insure it scores high in the competition.

In the past, our team had failed overwhelmingly in this aspect, so we elected to list everything we learned from our past experiences.

- Make things reliable
    - The more degree of freedom, the faster your design fails.
    - Make sure all the fasteners are snug, but not too tight[9].

[8] Please do not confuse them with spacers. Spacers are designed to create a designated space between two components whereas washers are designed to create a minute space just so components do not rub with each other.
[9] Make things hand tight. Too tight might result in cross threading the socket screws.

- Avoid pivot points.
- Always consider how much torque you need to counteract the leverage a pivoting cascading arm may impose to your robot.
- Always overpower instead of underpowering a component.

- Make all your motions as controlled as possible.
- Use as little moving parts as possible.
- If you decide to use gears to transmit motion, make sure the axles are well sandwiched between multiple channels and secured with multiple bushings and collars.
    - Use pillow blocks whenever possible.

3.3 Powertrain

Powertrain goes hand in hand with chassis, it dictates how fast your robot may move. In the following section, we aim to describe and discuss the benefits and issues of some basic powertrain setups.

3.3.1 Different Styles of Powertrain

There are many styles of possible powertrain. In most cases, choosing and committing to a certain powertrain takes substantial commitment. In past seasons, we had fell into the idea of building a powertrain to get the robot running first and change it up frequently later on to enhance the performance. That is not the case. Therefore, we highly advise you to choose a powertrain carefully and continue to use the same mechanism throughout a competitive season.

Choosing the most optimal powertrain is an art of balancing performance. Here are somethings to consider: How much maneuverability and mobility would I need? How much time and I willing to spend on tweaking the performance of a powertrain? What do I value the most (out of mobility, speed, and degrees of freedom when strafing[10])?

3.3.1.1 <u>Two-Wheel Drive (Beginner)</u>

Two-wheel drive is a very simple design idea where you use two wheels to power your front or rear wheels and leave two dead wheels on the other end. This mechanism is very easy to build because there is often very little gearing required and you only need to power two wheels instead of four. Lack of moving parts means it will be more reliable and requires little time to tweak the system out.

However, where you gain in mechanical simplicity, you will lose on the field. Two-wheel drive is very impractical on the field. You often spend a lot of time turning and attempting to point the robot at the right direction. It is also dismal at precise operations. If you wish to make fine adjustments with a two-wheel drive robot, it will be time consuming, and you may not even achieve the target result.

Therefore, unless your team is a complete beginner or have run out of time to construct a robot, we would not suggest going with two-wheel drive.

[10] Strafing – to drive in a direction that is neither forward, backwards, or turning left or right.

3.3.1.2 Four-Wheel Drive/Tank Drive

Tank drive is a very practical driving style. It provides you loads of traction and power, it allows you to traverse difficult terrains, and it is mechanically simplistic if you avoid complicated power delivery system. It is almost one that lies in the middle of the range. It can do a bit of everything but it not the best at anything.

Tank drive is not as dreadful to handle as two-wheel drive robots, but you still lack the ability to make fine adjustments. They offer a lot of traction, but they lose out to six-wheel drive robots in that regards. They are mechanical simplistic with simple power delivery systems, but most teams will need to use gear, sprockets, pulleys, or more complicated systems to deliver motion, so there really isn't much to gain from that aspect.

Therefore, we would suggest you balance the performance requirements and your other needs before you commit to a four-wheel drive chassis. However, on the plus side, if you do regret the choice because you need additional maneuverability, it is always as simple as switching the wheels and change up the codes to become mecanum-drive robot.

3.3.1.3 Mecanum H-Drive (Intermediate and Advanced)

In most seasons, you will see most teams using this driving mechanism. It is a very versatile system where you may extract almost maximum performance from all aspects (except for mobility). It is really nice to drive, and the mechanical requirements of these mechanisms is really simple. However, it will be a huge commitment to go with this mechanism instead of the more simplistic ones.

As a starter, mecanum wheels are very expensive, and they must be formatted in a set format. If you install them correctly, your robot can strafe in virtually all directions, albeit slower than going forward or backwards. In addition, programming them to go in a specific format can be extremely painful, namely due to the complicated system for each wheel to go in the correct direction when strafing.

In summary, mecanum wheels are fantastic and you will see most teams in most seasons using them. However, they are somewhat painful to work with and a huge monetary commitment. Therefore, we would suggest mecanum drive as long as you are not in huge demand of grip and you are willing to invest time to fine tweak the system.

3.3.1.4 Six-Wheel H-Drive (Intermediate and Advanced

Issues with mecanum drive may be fixed by simply replacing mecanum wheels with traction wheels, which in turn reduces a robot's maneuverability. However, if you are in demand of more traction, six-wheel drive is the way to go.

Its benefits come from installing six wheels onto the robot, usually powered by 2-4 motors. This makes direct drive inapplicable. Therefore, it increases the mechanical complicity dramatically. In addition, consider the weight of the robot before deciding to power it with 2 motors because it may easily burn them out.

We would suggest using six-wheel drive if you require it to go off-roading. However, if maneuverability is your goal, go with mecanum drive.

3.3.1.5 Holonomic Drive (Advanced)

If the degree of maneuverability offered by mecanum drive is still insufficient, consider holonomic drive. Whereas mecanum drive falls in the category of H-drives, holonomic drive is much more complicated, and it requires wheels pointing in strange directions. Its benefit being it may drive to any direction accurately and with no speed difference.

It is quite an extreme setup, and we cannot grasp why a team may choose to use this drivetrain simply because mecanum drive offers most of what a holonomic drive offer, except it is much more versatile and mechanically simplistic because robots do not like the diagonal positionings. At least in FTC, you will never need more maneuverability than mecanum drive may offer. However, if you do see a team choosing this style, be mind that they have definitely put in loads of work and they are probably one of the most intricate teams in your league.

3.3.1.6 Drive Style Comparison

In FTC, depending on the season, all teams seem to favor one drivetrain. In most cases, that will be mecanum drive. In odd seasons that you need to climb or go over bumps, you will see a lot of teams going with tank or six-wheel drive.

The following diagram will give you a very good, graphical overview in what each drive train has to offer.

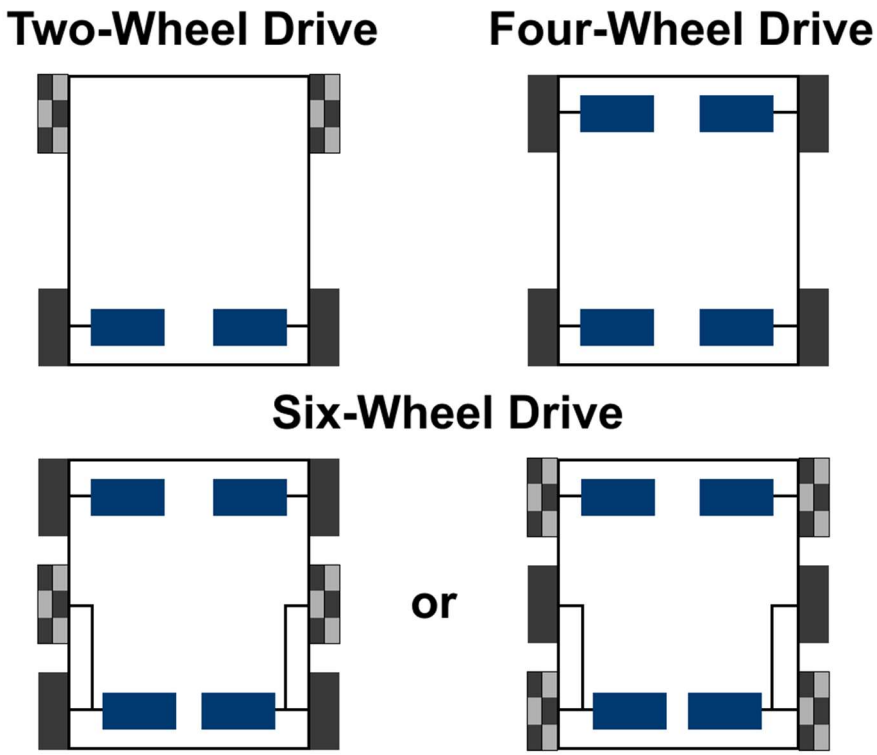

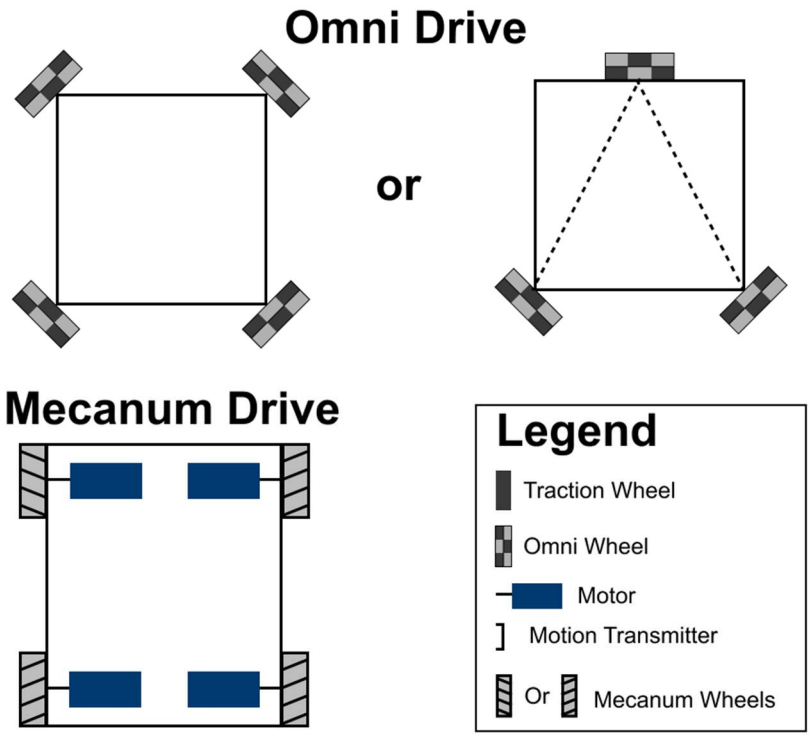

Figure 23: Drive Style Comparison Diagram.

3.3.2 Power Delivery Methods

No matter how well designed your robot is, if your power delivery is inconsistent, your robot will not look poised and may be very hard to drive. Therefore, in the following section we aim to discuss some of the common techniques, as well as other methods that are rare but effective as well.

3.3.2.1 Direct Drive (Beginner)

Direct drive means to use the shaft of your motor to directly transmit motion to your wheels, which is a really reliable and mechanically simplistic way to power your wheels. Its downside being your motor ratios much be fitting to provide both enough torque and speed to your wheels, which is often not the case. Another issue being potentially damaging your motors, which will be expensive and extremely problematic. Therefore, we would only suggest doing so if you are a beginner team; for teams that wish to build a more permanent powertrain, we suggest you looking into other mechanisms.

3.3.2.2 Gear Drive (Intermediate and Advanced)

Gearing is a fundamental topic that many struggles to grasp. Some say that it is extremely simple, just put two gears at a spot where they make contact and spins. However, in robotics, we prefer to look at it from a more pedantic side of view.

There are many types of gearing contraptions: regular gears, worm gears, bevel gears, pinion and rack, internal, helical, herringbone, etc. In FTC, after years of kit development, regardless of your

build system, you may easily adapt these gearing systems to your drivetrain (though some are really not designed to do so).

After committing to a specific gearing contraption, you also need to choose its ratio. Do you want more speed, or more torque? If you want more torque, are you interested in stall torque because that could make you change your DC motors if they are not fitting. The list gets long and frankly no one can think of all of them at a certain point of time.

Therefore, to simplify, we will only suggest using spur gears in the drivetrain.

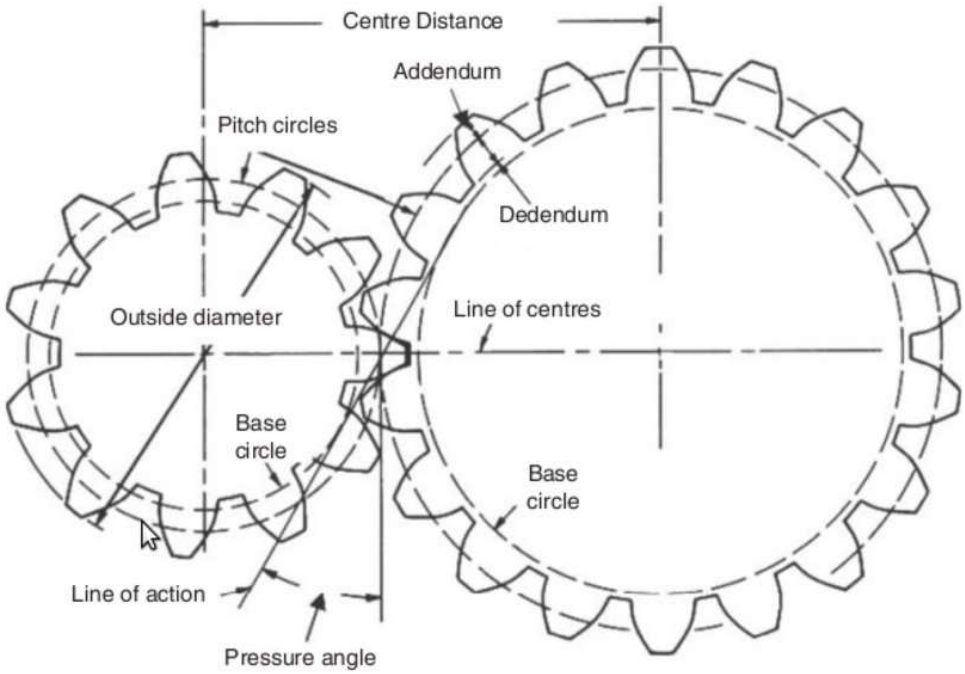

Figure 24: Basic Spur Gear Diagram [19].

Spur gears are two colinear gears that make consistent contact and induce motion. This mechanism is relatively cheap, and simple to attach, as well as calibrate[11].

They are largely interesting because the teeth ratio is crucial to the idea of torque versus speed. The larger the drive gear in comparison to the dependent gear, the faster the speed, but torque will be heavily influenced[12].

Another issue to consider is structural integrity. In past seasons, we found out the gears should be mounted on axles and carefully spaced out. If the slide ever so slightly, the motion transmission will be heavily impacted.

Then there is the issue of mounting. For beginner teams, gearing may not be mechanically simplistic because without custom-made parts, mounting gears are really hard. Because you must

[11] The pitch of both spur gears should be identical, or else the motion will not be transmitted smoothly.
[12] Note that torque referred here is not stall torque.

space them out carefully at a certain angle and location, thus making the system extremely delicate and faulty.

Therefore, gearing a powertrain is a good solution, but it is not mechanically simplistic and require immense attention to build a reliable system.

3.3.2.3 Sprocket and Chain (Intermediate and Advanced)

Sprocket and chain may sound like a complicated system, but they are commonly seen in everyday life, namely on your bikes. Similar to gearing, roller chain systems can be largely complicated if you do dig deep into the geometries. However, in our case, our main concern is in achieving a highly reliable yet fitting powertrain.

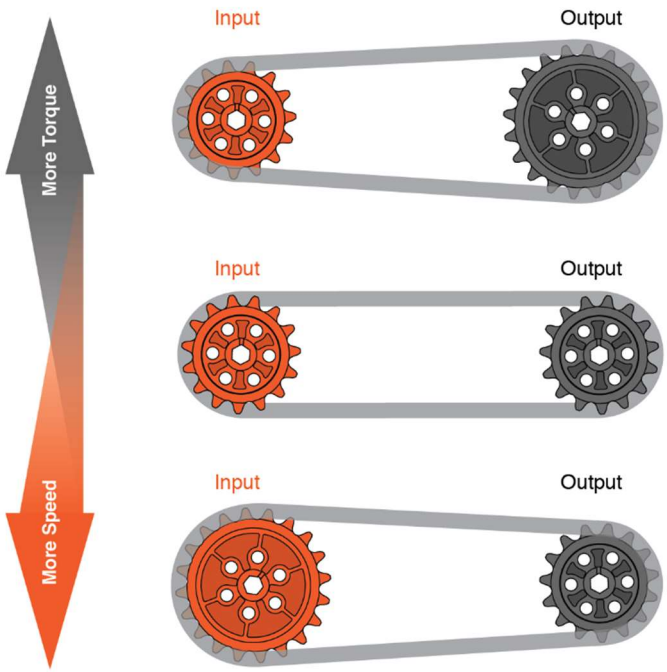

Figure 25: Impact of Change of Size of the Driver and the Driven Sprocket [20].

Unlike a gearing system, a sprocket and chain system will allow you to space out the sprockets, thus generating more flexibility in packaging. In addition, sprocket and chain systems are more reliable because the chain is almost holding it in place, while allowing some minor shifting between the two parts.

However, it is much more complex to work with at times. Firstly, you must cut the chains correctly, that means positioning it to the right place and find the correct bearing pin to push out. This is almost an irreversible process and could be time consuming. In addition, you must keep in mind the oscillation between inner and outer plates, because this pattern may be problematic to the chain tension in some cases. Another issue of this system being its connection. You may be able to connect them with either sealing the original link or a master link, but both are somewhat annoying to put together and undo, especially working with the original link. They almost always fail when extreme force is exerted onto pin that has been pushed in and out multiple times.

Therefore, depending on your need on packaging, gearing and chaining are equally painful, although we will still recommend doing so to protect your motors.

As a note to all teams choosing to use sprocket and chain for their drivetrain: if you elect to use the chain provided by any FTC build kit, they will be ANSI #25 chain, meaning you may purchase them for a lower price at your local hardware store. If your build kit only provide plastic chains, you may easily replace them with their equivalent, given it follows the ANSI standards.

If you struggle to understand the technical terms mentioned above, please refer to the glossary section, specifically Figure 8 & 10.

3.3.2.4 Timing Belt System (Intermediate and Advanced)

Timing belts might be a foreign term for some people, but it is extremely prevalent in the automotive industry. Simply open the hood of a car and locate its alternator[13], you will see a complicated belt and pulley system.

The timing belt system on an FTC robot will be vastly similar to one on a car, albeit with less moving parts. All systems must consist of a timing belt and at least two pulleys. In such system, the timing belts are usually stretch-on[14], although some may demand you to use a special tool[15]. This is not quite the case for FTC build kits.

Most popular kits do not come with belts[16], although their parent company may carry them. If you do decide to use them, you must keep in mind that their properties are unique and may be hard to adapt to another system.

All belts from FTC build kits will all require tensioners, which is a small contraption that allows an idler to control the tension by pressing onto the outer trim of the belt.

In addition, if you need something to control the packaging or a more permanently mounted tensioner, a simple solution is to install an idler directly onto the frame.

The relationship between the pulleys in a belt system is identical to one in a roller chain system (please consult section 3.3.2.3 for more information).

Another key thing is that the size of the timing on the belts because they come in various shapes and forms. For example, GoBilda elects a circular timing pattern where as Actobotics compatibles have a more angular timing pattern. Also, they are of a different size. Both the pitch and the height of the timings on these two systems are different.

Timing belts are just as annoying in terms of sizing as sprocket and chains, namely its lengths.

[13] Usually beside the engine, on the passenger side, just under in intake manifolds if they route them in the standard way.
[14] You must cut them to remove them, which is inconvenient for robotics teams.
[15] Usually not strictly necessary, though it is a good idea to use them.
[16] GoBilda being the exception.

Figure 26: An Example Setup Schematics from GoBilda [21].

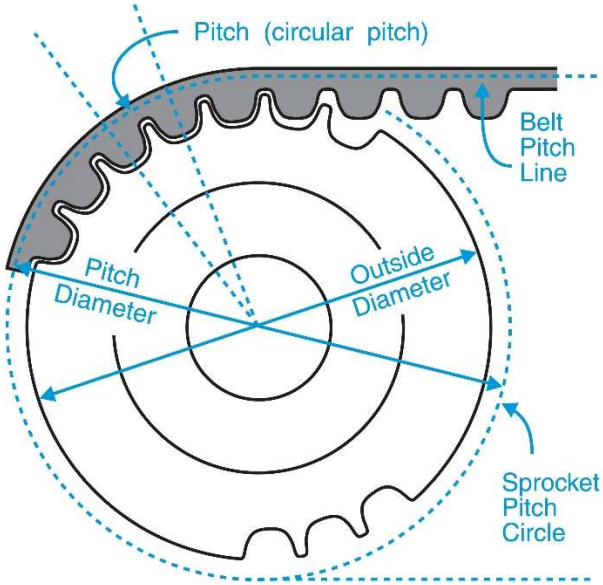

Figure 27: Example Timing Belt Geometry [22].

Most timing belts are sold with a range of lengths. You may cut and connect multiple belts together, although that will have a drastic impact on your system if it conducts continuous rotations (like in a powertrain). That may be a limiting factor to where you may mount your components and your general packaging. It also requires immense planning ahead of time as any minor change may be problematic to the tension of the belt.

Another issue being if any failures occur, it may be very hard to locate the exact replacement parts, which would take a devastating toll on your robot's functionality.

3.3.2.5 Other Alternatives (Advanced)

The above power delivery method of the most common ones in FTC. However, some teams may decide to use a niche design to extract maximum performance. For example, when I personally competed in the Austin Metropolitan Championship in Texas, many teams would elect to use compound gearing for better packaging. A team went as far as creating their own transmission, powering all four wheels with two motors that was sandwiched between their chassis and their crane mechanism.

In addition, for better off-roading performance, some teams may skip the regular powertrains, and created an oscillating tank drive with three wheels on each corner.

Therefore, although the previous section is designed to be comprehensive, many teams may push the boundary of possibility just for the smallest margin of performance gains.

3.3.2.6 Power Delivery Method Comparison

Choosing the correct power delivery method for your powertrain is almost an art of gain and compensation. Each power delivery method has its own problems and gains. Direct drive is very simple and compact, but it may cause issues if

3.4 Linear Motion

In most reasons, the challenges are designed in such a way that you are just short of reaching most of them if you obey the size limit. Therefore, teams have devised many clever contraptions to create linear extension motion. The following sections we will introduce you to some interesting ideas so that you may judge what is the best fit linear motion actuator for your robot.

3.4.1 Basic Sliding Rail (Beginner)

Basic sliding rails are really useful when you do not have to extend too much. In most cases, they use a rack-and-pinion mechanism to drive a channel up and down. Its benefit being its speed and reliability if installed properly, albeit it may cause issues with weight distribution and unreliable pivot joints since the motor powering it must be mounted on a moving part, potentially pitching the center of gravity throughout its movement, which will be unreliable at high-speed operation.

3.4.2 Cascading Slide (Intermediate and Advanced)

Cascading slides are really nice because they do the same as a sliding rail whilst having more layers of extension. In addition, it may be more reliable because your powering mechanism maybe mounted on the chassis.

In addition, the motion may be smoother as no gear is involved, just some servos and bearings.

Another benefit is that most cascading slides on the market is FTC legal, meaning you can customize it extensively.

The most common modified cascading slides are from Misumi Automation, as well as from Haas. Many teams will use components from CNC machines and attach them with a variety of parts, generating some very fast and reliable cascading slides that may reach way beyond what can be managed through any popular kit.

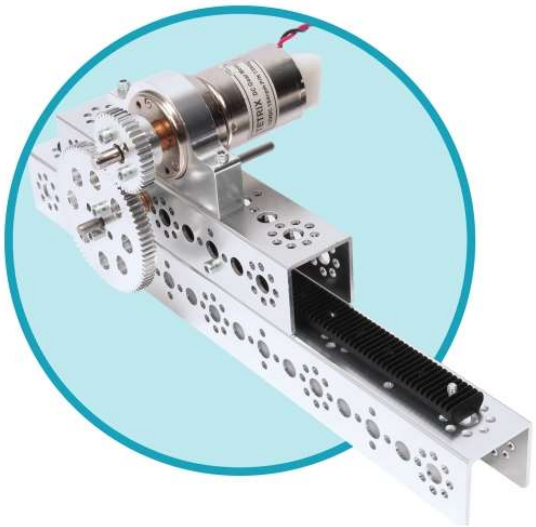

Figure 28: Image of an Assembled Tetrix Linear Slide [23].

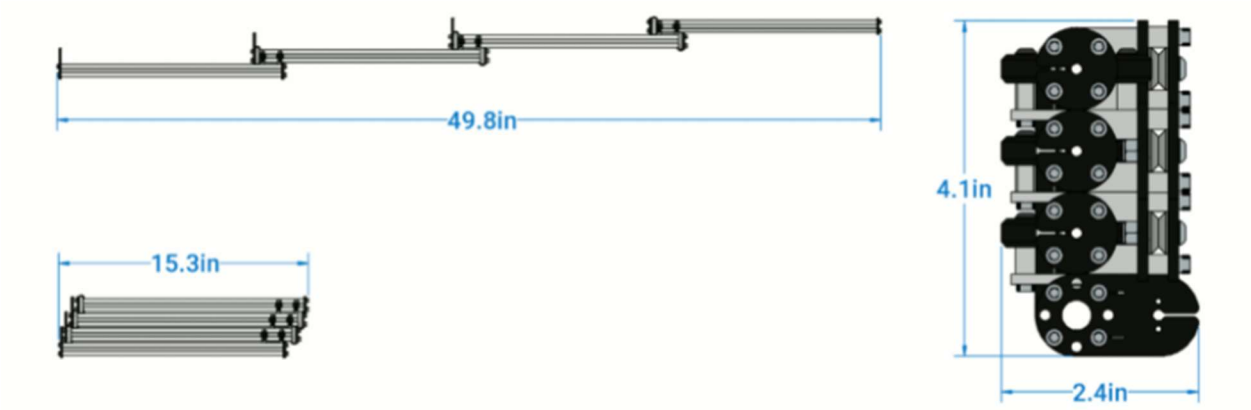

Figure 29: Schematic of ServoCity FTC Cascading Slide [24].

3.4.3 Linear Actuator (Intermediate and Advanced)

In certain seasons, the league will ask you to hang off certain field elements, which increases the need of a linear actuator.

Linear actuator is actually a general term specifically referring to all mechanisms that creates a linear motion in such a way. However, in FTC, all linear actuators are mechanical actuators where they use a motor to drive a nut up and down a shaft with spiraled thread and generate consistent motions.

You can buy kits or components to put together one from automation companies. Usually, the latter is more reliable and more heavy duty, but heavier and more expensive.

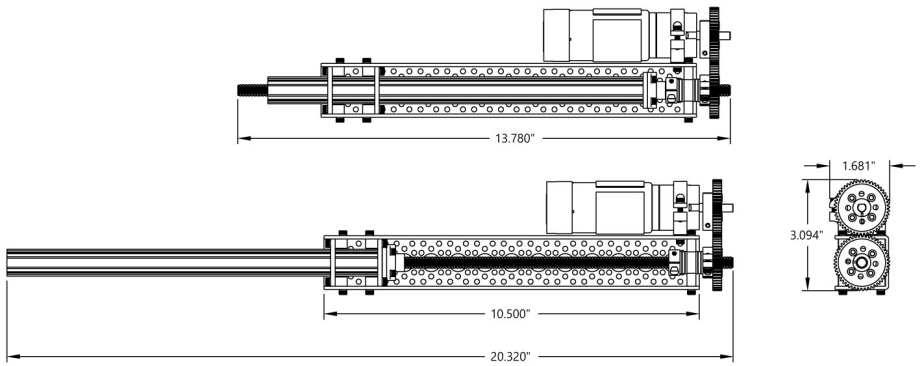

Figure 30: ServoCity FTC Legal Linear Actuator Schematics [25].

3.4.4 Other Budget Options (Advanced)

In the past, when we had to achieve linear motion but lacked the equipment to do so, we resorted to more budget options, which was unsuccessful. For example, we modified a drawer slide to act as a linear slide, which also pivoted. It was largely unsuccessful because we powered them with unreliable parts and use fishing lines instead of paracords.

However, this is an example of a proven concept that many teams use. Drawer slide linear railings are prevalent in many leagues, especially among teams that has limited budgets. They offer a very smooth linear motion that utilizes the same concept as most cascading slides; they are easy to stack; they are very simple to lubricate, etc.

Such options do exist in FTC if you dig deep into past robot designs. However, we do not recommend then to inexperienced teams as we failed spectacularly that time around.

3.5 Attachments

If you have followed this guide chronologically, you should now have a powertrain with potentially a linear motion actuator attached.

However, although you have a fully functional robot, it cannot complete any mission, since it may not be able to handle the game elements. Therefore, the key here is to have some sort of attachments there to handle the game elements. The following section aims to cover some popular ideas and mechanisms.

3.5.1 Intake

Intakes are really common because in most seasons, robots are allowed to carry multiple game elements. Unfortunately, for Freight Frenzy, that is not the case. Nonetheless, they are extremely useful contraptions.

The most common two types of intakes are roller intakes and scooping intakes.

Roller intakes are arguably the most prevalent type because they offer a great degree of flexibility. In essence, it utilizes the concept of a rotating sweeper that sweeps parts into a certain chamber, thus letting the robot gaining control of the game element.

It is extremely common because it allows customization by simply varying the gauges of the spinning intake, as well as easily gaining control of game elements in various shapes and forms.

Figure 31: Example Roller Intake [26].

Another common design is a scoop intake. In comparison, they are much easier to build, requires much fewer custom parts and tuning, as well as having fewer moving parts to potentially go wrong.

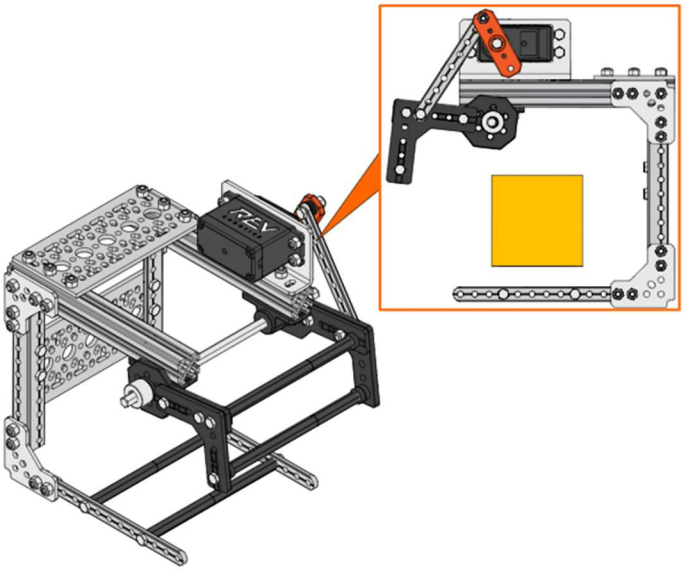

Figure 32: Example Scoop Intake [27].

There are many more potential intake options and designs, such as making roller intakes but replacing the surgical tubing with rubber traction wheels or compressible wheels. However, that is out of the scope of this guide since we cannot discuss every possible design. Therefore, as a suggestion, we encourage you to look into past robot designs and jot down the ideas that you like to incorporate into your own robot design.

3.5.2 Claw/Gripper

In seasons where you may only control a single field element, grippers are brilliant ideas since they offer a great degree of precision.

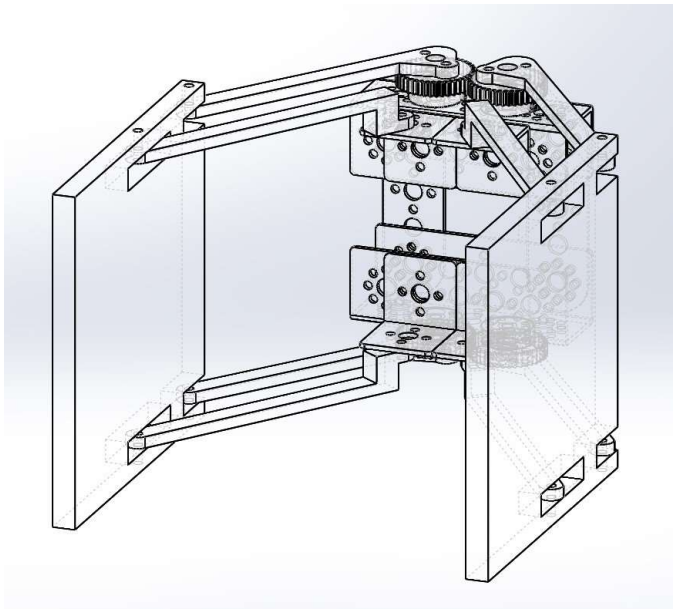

Figure 33: Sample Gripper Design.

Another benefit being they offer a great degree of customizability, especially with 3D printed parts. In addition, they are also easy to design and tweak, giving you full access to tune it until it generates loads of grip and accuracy.

We would suggest working with custom parts for a gripper though, since most metal parts are too heavy and offer too little surface contact area. In addition, metal surfaces are more slippery, which reduces grip.

However, if you do take the time and design such a custom-made contraption, chances are they will work brilliantly.

3.5.3 Dumping Mechanism

A common season theme for FTC is to deliver field elements to locations of certain heights without a great degree of accuracy, which may prompt teams to use dumping mechanisms. A great example being Rover Ruckus[17].

[17]The 2018-2019 FTC Season.

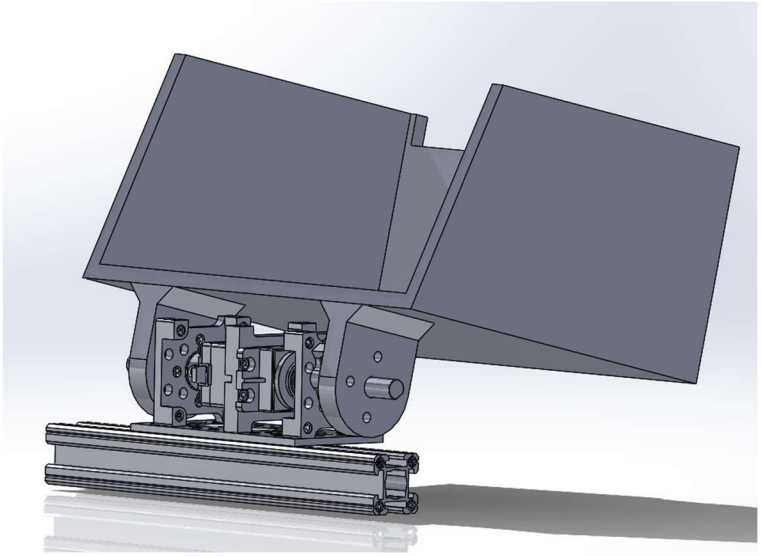

Figure 34: Example Dumping Mechanism.

They are mechanically simplistic, easy to command, only have a single moving part, do not create a large load to any component, and requires minimal service throughout a season. Their only pitfall being it may not be as controlled as other release mechanisms, which may be problematic for certain seasons.

3.5.4 Others

Attachments are highly season dependent. Some seasons you may only need a single attachment, whereas other seasons may demand multiple whilst operating in sync with each other. As we have iterated multiple times, the best place to brainstorm design ideas is to look at robots from past seasons, especially the ones that had huge scoring success. Tailor your own attachments in accordance with the specific challenge.

3.5.5 3D printing Components (Intermediate and Advanced)

A term that we frequently iterated is customizability. This is especially important for attachments. A common method for teams to do so is through 3D printing.

This method is especially cost effective and efficient. Nowadays, 3D printers are so powerful they may print a wide range of materials at great precision, while maintaining user friendliness. Therefore, many teams may elect to do so for certain parts.

However, we do not suggest any beginner team to work with them since it requires a great degree of CAD usage in order to succeed in that front.

In addition, a 3D printer of decent quality may be well into the fourth digit. For any beginner team, that is a large commitment and investment that could well be spent on getting more high-quality structural components.

If you are interested in using 3D printing but have never had any experience with CAD, please refer to section 4 where we delve into this issue.

3.6 Lubricants

Lubricants are really important, especially for robots with bearings and multiple moving joints. If you do not lubricate parts properly, it may create rough motions and potentially cease a joint, hence leading to a failure.

As a general guidance, we would suggest using a variety of grease and lubrication oil just to keep certain parts smooth.

For example, if your build system uses bearing bushings, try to treat it with bearing grease or other liquid lubricants, but avoid anything that is designed for an automotive because they can be really chunky and hard to apply, as well as generating strange waste products as they oxidate[18]. They are not designed for small-scaled robots, therefore, it may be best to avoid them.

Damper oil or strut oil are often good choices as they are prevalent and are sold with a varied range of chemical composition and viscosities. Sometimes they are not suggested since they may become sticky and hard to clean overtime. However, this should not be a concern if you apply them correctly.

As a rule of thumb, RC car shops, hobby stores, and other locations where enthusiasts of STEM-related hobbies are very likely to have a wide variety of lubricants in stock. In most cases, their owners are extremely helpful as well seeing they have a very niche market and are unlikely to be frequently occupied.

4 Computer-Aided Design Guide and Resources (Intermediate and Advanced)

CAD is a critical part of modern engineering. Nowadays engineers rely on CAD to tell them what to do and how to make a specific part. In the following section, we will look at a wide selection of traditional and non-traditional CAD software, their functionalities, and some tips and tricks to navigate around them.

4.1 Choosing a Software

In most cases, choosing a CAD software is a huge commitment since it will require effort to master it. In addition, many professional CAD software are not free, they are usually charged through subscriptions, therefore you must do your research and thought out the process before committing to a certain choice. In the following section, we will discuss the various types of CAD, some common software, and discuss their pros and cons.

4.1.0 What is CAD?

CAD is a general term for 3D modeling software. Nowadays, thanks to its prevalence, it has been split into two vaguely defined streams – traditional and non-traditional[19].

[18] They are designed for large moving parts, not small bearings.
[19] This is often referred to with other terms as well, such as hobbyist vs professional, basic vs complex.

Traditional CAD often refer to the professional software that engineers use to turn 2D technical drawings into 3D objects through a selection of geometrical operations. Some common software and their parent companies include Fusion 360 (Autodesk), AutoCAD (Autodesk), Inventor (Autodesk), Creo (PTC), OnShape (PTC), SolidWorks (Dassault Systemes), and CATIA (Dassault Systemes).

Non-traditional CAD refers to modeling software that uses non-technical operations to model certain geometries. Some prevalent examples include Autodesk 123D, Tinkercad, Blender, etc[20].

In the following section, we will be concentrated on traditional CAD as they are more relevant to the modeling required for FTC.

4.1.1 Autodesk Fusion 360

Fusion 360 is almost the holy grail of hobbyist CAD software as it is extremely user friendly, offers a wide selection of features, and has a fantastic online library of tutorials.

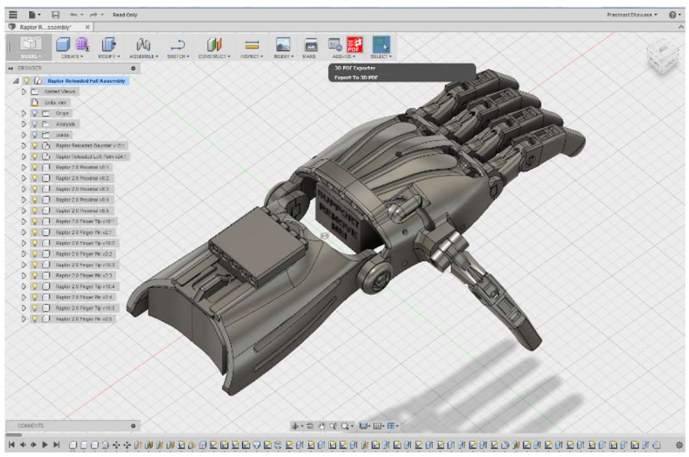

Figure 35: UI Example of Fusion 360 [28].

It is a very good starting point for beginners, though it does have a glass ceiling once you get to a certain complicity in your modeling, especially when it comes to making changes to previous features[21].

Its strength lies in the integration of CAM, CAE, and even elements of BIM, making the user experience more concentrated and centralized.

Another benefit for using Fusion 360 in FTC is it supports online collaboration, cloud storage, and direct STEP importability.

As with most Autodesk products, you get free educational access to Autodesk Fusion 360.

One issue with Fusion 360 is its lack of geometric mating in assemblies, potentially making their assembly features slightly harder to understand and acquire.

[20] It should be noted that some do not consider them as CAD, but rather rendering.
[21] It is not about if you can make edits afterwards, but Fusion 360's parametric modeling support is not great; more on that in section 4.3.1.

4.1.2 Autodesk Inventor

Autodesk Inventor is very similar to Fusion 360. Other than the user interface and some function integration, it is almost identical to Fusion 360. The two shares many features for basic modeling and assemblies.

However, unlike Fusion 360 which is designed for makers, consumer products, and other hobbyist usages, Inventor is specifically designed for mechanical engineers.

You can see that in its tool selections and its lack of CAM integration, as well as its increased support to dynamic and parametric modeling.

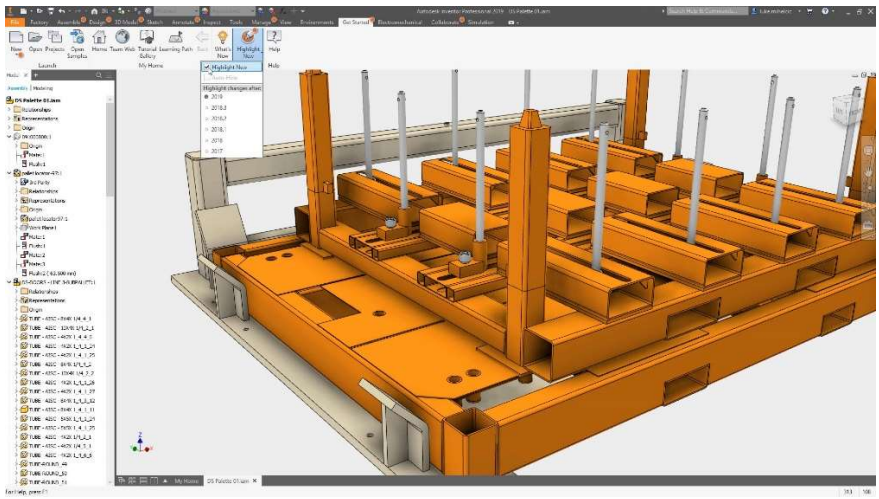

Figure 36: UI Example of Autodesk Inventor [29].

It also lacks the ability to collaborate. It also has the same assembly mechanisms as Fusion 360.

On the plus side, it is more commonly used in the industry, it is free with educational licenses, and it can directly import STEP geometries.

4.1.3 OnShape

Onshape is also very similar to Fusion 360, though in a radically different way. Both are designed for consumers, not professionals; both are free for hobbyist and students while a pro-license only unlocks some more advanced collaboration features; both have very user-friendly UI; both integrated similar programs, even though Fusion is more extensive; etc.

However, there is a defining difference between them – Fusion is partially cloud-based[22], whereas Onshape is completely cloud-based. That means of your computer cannot match the processing minimum requirement of any CAD software, Onshape is your only affordable choice.

[22] The software is locally installed, all functions happen locally, but the parts and storage of independent components is cloud-based.

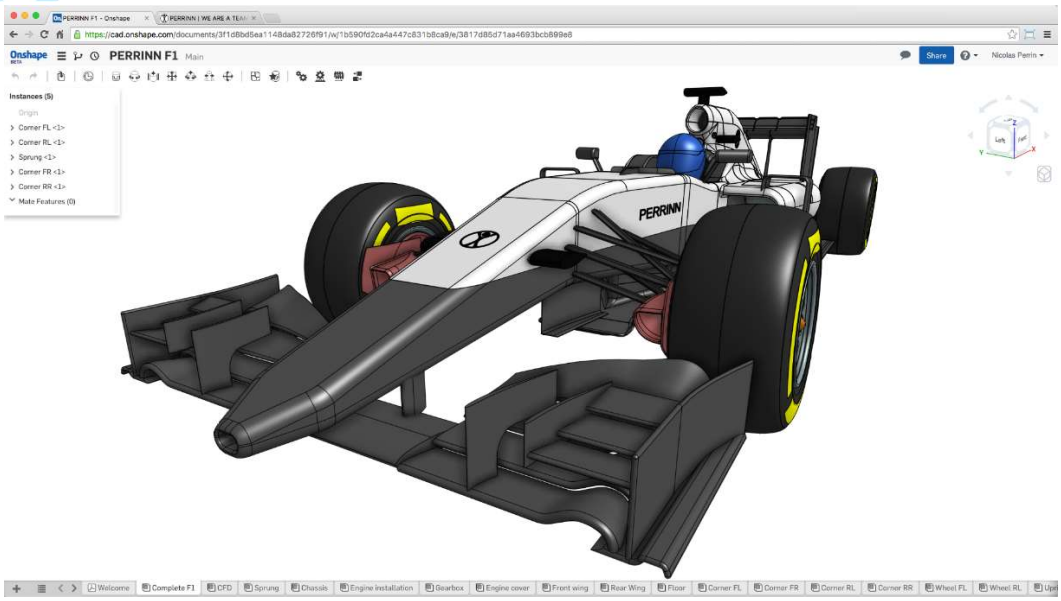

Figure 37: UI Example of Onshape [30].

Onshape is available to use on a browser, without any operating system restriction, and does most of its calculations remotely. That means even using a slim-profiled computer will not induce serious damage due to overheating, or at least in comparison to other available software.

It also offers an extensive amount of advanced modeling support, as well as direct importation of parts.

However, its major downside being the slow operating speed when encountering a major project. Depending on your current hardware setup, you might be better off going with Fusion 360 if they can undergo the load required.

4.1.4 SolidWorks

SolidWorks is the flagship product from Dassault Systemes, it is also the industry leading CAD software. Despite its expensive price, it is very much worth it.

Although it lacks the ability to collaborate and direct import, its assembly mechanisms are easily the best. They use both mechanical and geometric assembly, with integrated shortcut, which makes modeling your robot with 100+ components much more efficient than others.

Personally, we use SolidWorks and Fusion 360, so we may be biased. However, from trying out a variety of software, this is still by far the most user friendly once you get use to its UI.

However, its downside being its price, with a multi-thousand yearly subscription fee or a student version that is more affordable. We personally use an older version of SolidWorks because it used to offer a lifetime subscription by paying a one-time fee.

A cheaper way to acquire SolidWorks is to purchase a permanent license of SolidWorks from someone who updated to the most recent version.

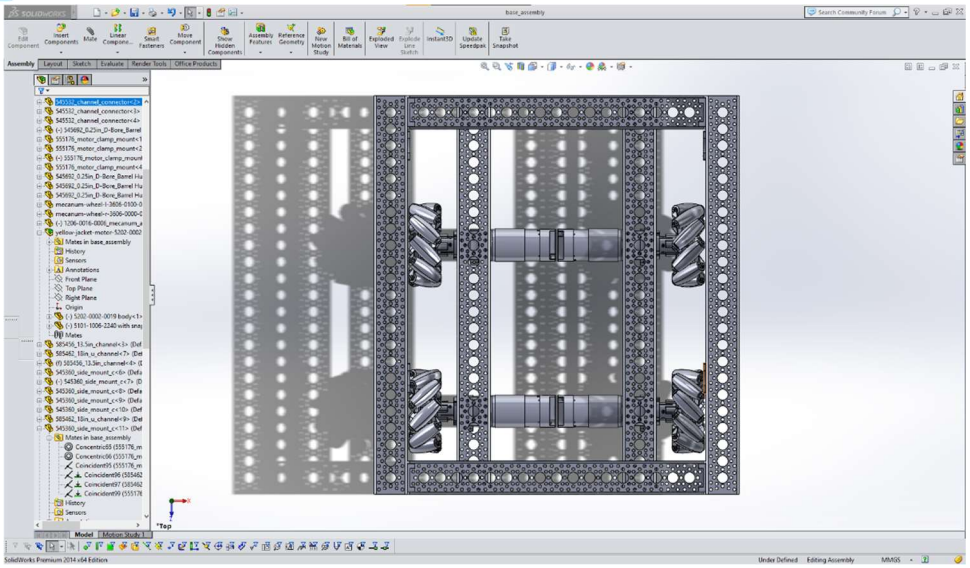

Figure 38: UI Example of SolidWorks.

Although pirated versions are available online, we urge you to go through the proper channels to acquire this software since that is neither an ethical nor a gracious professional action, as well as illegal.

4.1.5 Other Alternatives

Another two very common traditional CAD software that comes to mind being CATIA and Creo. However, both have their independent issues.

CATIA is designed for Aerospace engineers, concentrating all its features towards making smooth, connected surfaces that can be easily sculpted with sheet metal or other composites.

Creo is part of the PTC ecosystem, as a more professional version of OnShape. However, it does not have any standout features on top of what OnShape offers for free albeit may allow better collaboration at a very expensive price.

Another one is AutoCAD, but that one is mostly designed for manufacturing, especially at making 2D engineering drawings, therefore it might not be applicable for FTC.

There are also non-traditional CAD software that you may use. Blender is the most common one, then TinkerCAD and 123D are also quite prevalent. Their issues being not bring able to use geometric constraints to model your robot, which makes it much less efficient and accurate.

Therefore, we would strongly suggest sticking with one of the above-mentioned software, because these are more standardized and will be the easiest to adapt to.

4.1.6 Simulation Software

For certain people, they use CAD simply to render parts, simulation is the more critical side of modeling. This is especially true for mechanical engineers.

In FTC, simulations are not extremely relevant, but it is good to simulate the stress and forces that is exerted to your robot or components.

A downside of simulation being they are extremely hard to learn and are often a huge struggle to understand, as well as being unaffordable seeing their hardware requirement is immensely high.

There are a few offerings online though that are worth considering.

ANSYS Workbench is the standard for the industry, which is free with student version, meaning your simulation nodes are restricted, which means your simulation resolution is restricted with large models unless you pay them.

However, ANSYS Discovery, a much easier to learn software does not restrict that, and requires much less immense processing power, though the learning support is not great[23] and it can only do basic simulations.

In addition, SimScale, a cloud-based simulation software is also a potential avenue. It is free for 3000 cloud core-hours, which means you can use it on a browser and no calculations will be conducted on your laptop, making it very much the "affordable" choice[24].

4.1.7 Hardware Requirement

CAD is extremely hardware dependent, meaning it may not be a smart choice to work on CAD with a laptop. In addition, most CAD software are incompatible with MAC, and/or Linux, therefore operating system must be of consideration for you when choosing a fitting software.

Another issue that laptops may have with CAD is overheating. Due to the hardware dependent nature of CAD, your CPU[25] and graphics card are often subjected to high load, which leads to overheating. This is amplified in slim profile laptops because their airflow is suboptimal, hence many CAD users elect for gaming laptops or desktops.

In addition, something else to keep in mind is graphics card. Although we do not suggest you purchasing a Quadro graphics card for accurate geometry visualization, discreet graphic cards are almost a necessity. They enhance both the graphic quality and the CPU thermal performances[26].

If you do plan to model beyond 500 parts per file, Quadro graphics is highly suggested. I personally run a Quadro RTX4000 with SolidWorks and it makes a huge difference for me when conducting simulations, modeling with large assemblies, as well as handling complicated surfaces.

Most people think that high quality gaming laptops are fantastic, but they are really not designed to do refined calculations. The following figure shows a failed attempt of a gaming graphics card rendering carbon fiber. You can see that it is really struggling to capture the essence of the composite.

The following figures shows how Quadro's RTX graphics captured the details of the composite. At this resolution, it may be very hard to see its details, but at least it is a very smooth surface

[23] Only from ANSYS, since it was only released half a year ago. Online learning communities takes a long time to grow.
[24] In FTC, 3000 core-hours is only enough to calculate the stress exerted on a static strafer base at decently high resolution, then you have to pay them for more usage, which will become very much unaffordable.
[25] In the case of laptops, APU is the proper term.
[26] Since the graphics card in the CPU is not being used, less power is distributed there, and less heat is generated in that compartment.

without any pixilation. This shows the fundamental difference between graphics cards that are designed for CAD and those that are designed for other purposes.

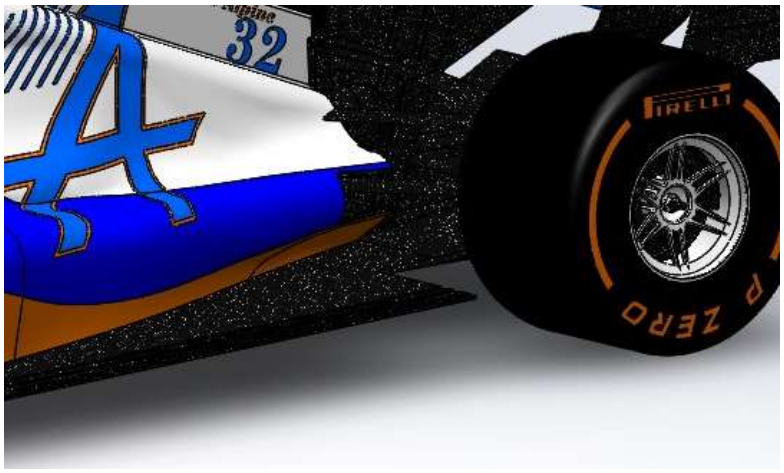

Figure 39: Example of Issues Caused by Insufficient Support from Graphics Cards.

Figure 40: Example of Quadro RTX Graphics Workspace Renders[27].

In most cases, CAD modeling relies on a single core, and having a slower core speed do not fundamentally hurt their functionalities. Therefore, most adequate consumer graded CPU are sufficient and having a workstation is not a necessity.

A good place to check is their hardware requirement. Some companies may make the requirement the bare minimum to run the software where others demand higher specifications to allow them run smoothly. A general rule of thumb being using hardware that is a step higher than the demanded hardware will guarantee smooth runtime, as long as you provide as much cooling as possible[28].

[27] The previous figure shows a workspace without render, where as the Quadro graphics card can sustain the load of rendering the workspace. Therefore, although this comparison is not completely fair, it is simply due to the inability from the gaming graphics card, outlining the benefit of a workstation graphics card if they are affordable to you.
[28] Note that most gaming desktop cases are unfitting because they offer too little cooling duct and instead prioritizes aesthetics.

4.1.8 Software Comparison

CAD Software Comparison

Computer-Aided Design: Transforming an array of 2D technical drawings into a 3D model with well-defined properties, through a series of features.

There are many CAD software that are readily accessible and prevalent. Here, we outline the four most common ones for mechanical engineers and hobbyists.

Software (not restricted to Student Version)	Fusion 360	Inventor	On Shape	SolidWorks
Price (Student Edition)	Free	Free	Free	USD 99 per year
Software Location	Local	Local	Cloud	Local
Storage Location	Cloud	Local	Cloud	Local
Basic Modeling	Yes	Yes	Yes	Yes
Intermediate Surfacing	Yes	Yes	Yes	Yes
CAD Libraries (Basic)	Yes	Yes	Online Community	N/A
CAD Libraries (Standarized Parts)	N/A	Common Fasteners	Online Community	Extensive
3D Sketching ability	Yes	Yes	Yes	Yes
Advanced Surfacing	Yes	Yes	Can be done	Yes
Static Rendering	Yes	Yes	Yes	Yes
Mold Design	Yes	Yes	Can be done	Yes
Assembly	Yes	Yes	Yes	Yes
Engineering Drawing Conversion	Yes	Yes	Yes	Yes
STEP File Importability	Yes	Yes	Yes	Yes
Assembly Directly with STEP Files	Yes	Yes	Yes	Requires a single conversion
Mechanical Assembly	Yes	Yes	Yes	Yes
Geometric Assembly	Yes	Yes	Yes	Yes
Feature Assembly	Yes	Yes	Yes	Yes
Parametric Modeling	Yes	Yes	Yes	Yes

Important Notes:
Onshape is capable at making molds and advanced surfacing, but they both either require complicated maneuvers or the installation of external feature mods.
Since all software use radically different names for their assembly features, we referred to features such as joints and fasteners quick attach as mechanical assembly, mating constraints and geometric assembly, and mate patterning as feature assembly

FIRST MEADOWRIDGE SCHOOL

For More information, Please Refer to www.entradoxrobotics.com

Figure 41: CAD Software Comparison Chart.

4.2 Learning CAD

Learning CAD is very simple, it is a rinse and repeat process. You must spend time practicing it on a regular basis to be good at using it. The more you use it, the more shortcut you will learn, and you will become more efficient. In the following section, we will discuss some of the basic concepts and give out general tips and tricks that is applicable to all CAD users.

4.2.0 What do you have to know to use CAD for FTC?

The absolute minimum to use CAD just for FTC is very niche and case dependent. If you plan to only work on attaching parts from your build kit online, there are only a few concepts and functions that you need to know. But if you plan to work on customized parts, you need to know all the basics or else you will struggle to construct anything with even just a very low degree of complicity. There really is no one size fits all type of advice in this case. It all depends on what you intend to do with CAD.

We suggest you learn the basics of CAD anyhow and expand on that if needed.

4.2.1 Basic CAD Concepts – Geometrical Constraints and Terminologies

Geometrical constraints are the basics of CAD, they are the fundamental basis that makes your CAD model accurately defined in terms of general dimension and shape.

Geometrical constraints are axioms that we assume to be true and assign to individual geometric shapes, at a 2D or a 3D level. Geometrical constraints are usually based on the most common geometrical relationships, such as vertical, horizontal, coincident, tangent, concentric, etc.

These terminologies are very easy to learn, although different software may use different terms.

Geometrical constraints are very powerful, they can streamline your designing process infinitely, especially when used in conjunction with patterning sketch or features. It avoids the difficulties of dragging and playing with the model just to get the angle you wanted. Instead, all you need is to input a number and the model automatically adjusts according to the constraint.

However, its downside being when it gets complicated it will be extremely hard to troubleshoot or even just navigate. At that point, you must find a single geometric constraint that can release all other parts once removed. That could be challenging and time-consuming.

4.2.2 Sketching

Sketching is the basic of modeling. The 4 aforementioned software all require 2D technical drawings in order to conduct any basic features. Therefore, sketching is the absolute fundamental.

Sketching in CAD is just like drawing anything on your laptop except everything are straight or controlled arcs with dimensions and constraints.

To make something that is reliable and accurate to your end goal, always make sure the basic sketches are fully fined with no free moving points. In addition, always use driven dimensions to define parts, so that you can make sure that they will not be influenced by unwanted parametric modeling features.

Another thing to do is always make sure your sketch plane is correct. If that is corrupted or have the freedom to be automatically translated from your desired location, that may cause mayhem to all features committed after your initial sketch. Always choose a reference geometry that is static, such as the front plane, in most cases, try not to use a surface on your model because that can change if you go back a step to make an edit. That may cause massive headaches down the line, especially when working with large files.

4.2.3 Features

Features are often referred to steps that you may take to transform a 2D technical sketch into a 3D object or ones that modifies the 3D objects that you already have.

Most CAD software have an extensive bank of features where some is simply out of our scope.

In essence, features are like sketch tools, you need to make sure all aspects are well-defined. This is often simplified by the software itself, imposing constraints that streamlines your design.

4.2.4 Advanced Features

Features such as surfacing, patterning, threading are less common in some hobbyist software. However, they are extremely useful as the model gets larger and more complicated.

When you work with a model that has an extensive series of curvatures, surfacing will speed up your process exponentially, as well as effectively model things that you deemed impossible to create by using conventional model techniques.

Patterning is an extremely important concept to grasp for maximum efficiency. In FTC, since most of your robot should be symmetrical or close to symmetrical. Patterning can help you quick achieve that, by mechanically mating multiple components together.

Threading is also really useful, albeit not quite for FTC. For example, in SolidWorks, using “Smart Fastener”, you can choose the size and shape of the threads through selecting your desired fastener through their extensive collection of internal hardware standardization systems.

Advanced features are not complete necessary for basic designs; in fact, you do not need to know any advanced features to build just about anything. However, knowing them will help you massively as they can exponentially speed up your design process.

4.2.5 Assemblies

For FTC, since most of your robot will be from build kits or off-shelf parts, you will spend most of your time indulging in assembling parts on CAD if you indeed spent the time and effort to learn and use CAD effectively.

Assemblies are just like modeling; except they use a complete different set of tools to achieve the result.

The main feature for assembly is mating, regardless of if it is mechanical, geometrical, or a special dynamic joint that is a special feature all by itself. Mating is a concept that is extremely easy to grasp, especially with the basis of modeling. It essentially is like creating a technical drawing, assigning a series of constraints to make it look like a certain thing.

For FTC, chances are you will eventually have hundreds of parts in your file, meaning very slow response time and potentially downgraded graphics. In that case, be very patient with it, and save your draft after every major step.

4.2.6 File Types, Downloads, and Import

There are many different file types for CAD. Each software uses their own file. For example, SolidWorks uses .sldprt, inventor uses .ipt, etc. In addition, their respective assembly files also use a different system, thus another file type. At times this may get chaotic.

However, most CAD support direct file import from other CAD software where they may process them and let you store them as your desired file type. Some even take this one step further to increment direct import in their assembly files, meaning you can import a file directly into an assembly without changing their file type.

This streamlines our design process in FTC as most of your robot will be mostly built from build kits or bought parts[29], and you will be downloading their CAD files from their websites.

Some of the commonly downloaded files are either .STEP or .STL. If you wish to work with them in assembly and have all their geometrical properties intact, we suggest you using .STEP[30] since .STL compile models into a mesh, which is preparing it for manufacturing or further processing using CAM.

4.3 Tips and Tricks for Using CAD

In FTC, regardless of if you are just playing with a single part or trying to put multiple complicated parts together, you will come across times where you wish your design is more streamlined. The following are general tips and tricks that may help you with that, although the only way to master CAD and your efficiency is repeated practice.

4.3.1 Parametric Modeling

Parametric modeling is the most common modeling technique that people use on a daily basis. It is the essence of assigning geometrical constraints in such a way that if you change one of them, they all adapt. We emphasized that you should never draw a 2D sketch on the plane of a solid if you could help it, that is because when you change another geometrical constraint down the line, this solid plane may undergo translation, which a reference plane will not do.

Some other common practices of parametric modeling are to use patterning features or sketch tools, as well as using reference geometries when conducting modifications on your model.

4.3.2 Feature Suppression

Sometimes, everything seems to be in your way, and you want to just simplify your model for an instance. This will be extremely prevalent when troubleshooting, you do not want to delete

[29] The more advanced your build, the more you must indulge in working with external build materials such as sheet metals or 3D printed parts, which means less build kit parts. Nonetheless, you will have to assemble them in CAD anyhow.

[30] Regardless of the version, since there are two distinct versions of .STEP. Their distinction being one is newer and designed for the newer operation systems.

everything because that will damage your process. If that describes your case, then feature suppression will come to your aid.

Feature suppression is a tool where you can temporarily ignore the effects of certain features. This is very useful because it can simplify your model. In addition, sometimes you want to see what it will do if you make a small modification in an early step, but the software is refusing that because a later feature may encounter an error. In that case, you can suppress that feature to avoid that issue.

Feature suppression is one of the neatest tricks when modeling and it has helped us drastically over the past season. Therefore, try and utilize it when needed.

4.3.3 Dynamic Modeling

Dynamic modeling is useful, especially when you want to see what will happen if you turn that motor. With certain CAD software, you can even animate this entire process while simulating the forces acting on their movements. This is very nice because that allows you to skip the step of preparing the entire geometry to simulate their movements from a discrete simulation software.

Dynamic modeling is quite hard to learn though, even with the added benefit it might not be worth it to master it simply for FTC.

4.3.4 File Catalogs

For FTC, as long as you work with a build kit, everything you download will be titled with your SKU number, which you will likely struggle with remembering them[31]. In that case, file cataloging becomes extremely important.

Sometimes, you can simply make do by renaming each file to something that you can recognize, other times you need to put them into a spreadsheet with an array of pictures for each component in order to make sense of them. File cataloging is a highly personalized process. It will increase your efficiency for assemblies once you find the best format for yourself.

4.3.5 Mouse/Keyboard Shortcuts

Something that everyone overlook is prebuilt and customizable shortcuts. Most CAD come with a set of control that can be easily accessed by swiping your mouse a certain way or at the click of a keyboard command. For example, instead of dragging and find the best viewpoint, in SolidWorks, you can simply click and swipe to a certain direction to view the part at a standardized viewpoint.

5 Competition and Outreach Guide (For New Teams)

If you followed this guide chronologically, you should have arrived at a point where you have a functional robot and is ready to enter a local scrimmage. The following section talks about all non-

[31] Personally, I think they are fine, they are all patterned and are quite easy to grasp. However, my peers have pointed out that most people who have yet to work with CAD extensively might not yet be equipped with the ability to associate SKU numbers with parts by inspection.

technical aspects of FTC, as well as what to do at most league organized events, including qualifiers and elimination finals.

5.1 Team Management

FTC is a team competition, everyone on the team must be involved in most aspects. This means someone or a group of people need to take up the responsibility to ensure that this is what happens.

Ideally, you should elect one or two team managers who takes care of all the general schematics and dynamics of the team, as well as handle the role of communicating frequently with external personnel.

Your team mentor should not be taking up the role of team manager as it should be taken by a student. All team members should be very proactive as well, working independently on your assigned tasks and remain connected with all other team members.

It should be noted that a team should choose and use a communication software that everyone is frequently involved in all discussions. Ideally, this software should also have features that allow effective management such as to-do lists, forum-styled discussion panels, and other progress tracking features.

5.2 Marketing and Promotion

FTC is a relatively expensive competition to run, therefore you will likely rely on some fund raising. In that case, you must have a team of students who dedicate a substantial section of their time on marketing your team.

Once you nail down your team identity, something you should make is a sponsorship package. It essentially outlines your aim, your experience, your need, and what you can contribute to your sponsors.

This is usually a short, highly graphical booklet that includes all the important information about your team. In addition, it should also be colorful, easy to read, and concise at every point. Also, providing graphical examples of your advertising can be really helpful for sponsors in order to see your potential contribution to their business.

You should also be considerate of who you are approaching. Making a list of potential sponsors that you want to approach may be a good idea. Since FTC is a STEM competition, companies along that line may be more inclined to sponsor your team.

Finally, you should create a system of how your team may receive sponsorship. Having a dedicated financial management system for your team may be extremely useful and make your team seem more professional.

Keep in mind that you might need to approach a lot of businesses and only a few may decide to make small donations. Do not feel discouraged. Gaining monetary support from external sources is a tedious and arduous process. Be patient and you will eventually find the niche group of people who are interested in supporting your team.

5.3 Outreach

FTC is not all about technical breakthroughs in terms of robotics, but also spreading STEM to people who are less privileged. The following subsections aim to discuss what you can do to be an active contributor to STEM education.

5.3.0 Target Audiences

Since FTC is aimed at students in grade 7-12, therefore you should target children or teenagers that are either near or below this age range. However, be aware that below this grade range may be problematic for you to manage and parent permissions may be a legal requirement.

Anyhow, you should also target less privileged children, as most low-income families have very little exposure to STEM in comparison to others.

5.3.1 How to Gain Support?

FTC outreach is targeted to get more kids involved in robotics and potentially compete in their competition systems in the future. Therefore, there is a wealth of league grants and forms of supports that may help you initiate your own robotics workshops. Simply browse through the FIRST website or approach your local league organizers, you will find a lot of resources that may aid you in this process.

Alternatively, networking is also quite critical in FTC. Through networking, you might get support from your local organizations such as school districts or libraries, and you may be able to host events at these locations. This may also help you out with paperwork and fulfilling other legal requirements.

COVID puts a stop to many things. However, as restriction eases, you will be able to host in-person workshops. If not, remote events are also possible and are made much easier since the lockdown amplified the amount of open-access online STEM education platforms.

5.3.2 How to Make them Interesting?

When working with children and teenagers, they may be easily distracted by their surrounding environment. Therefore, you must make the workshop extremely interesting and engaging.

In the past, we have hosted many workshops within our school, as well as non-robotics related events both in person and online. What we found, was that students are more interested in hands-on experiments rather than lectures that may or may not be informational.

In response, we often adapt the system of creating a challenge for them to indulge in solving. This way, they are involved, focused, and very much engaged in learning through practical practices.

Alternatively, integrating games into learning is a great way to grab their attention, especially when your audiences are very competitive.

In general, there are a lot of ways to make things interesting for children. However, teenagers are a completely different story. They often cannot be bothered and will choose to not pay attention. In that case, you should focus on the ones who are interested and filter out the ones who are simply there to fulfill certain aspects of their graduation requirements if possible.

5.4 League Events and Independent Scrimmages

League matches, scrimmages, qualifiers, and all other events are a crucial part of FTC. In essence, they are standardized. There is usually a basic procedure that you must go through for each event and add-on tasks that might be required for certain events. The following subsections contains some description and tips from our past experience, regarding all FTC league events.

5.4.0 What will happen at these events?

In general, at any event where robot matches are held, you must arrive and have your robot pass the inspection pits before you may attend any match.

During robot inspection, your robot will be passes through a series of questionnaires, including size and weight limit. In addition, your team customized game element[32] will also pass through a sizing test. You will also be obliged to drive your robot at some point during inspection.

This inspection is aimed at deeming the robot legal and safe to compete on the game field. Once complete, your robot may participate in matches without any further inspection unless the referees suspect your robot to be larger than the maximum size or have installed illegal parts after passing inspections.

During league matches, you will be playing on the field with an alliance partner, and your goal is to score as many points collectively as possible. You will have to collaborate in order to score high and have as little interference with their strategy as possible.

If this event is a scrimmage, your points are not to be officially recorded for qualification purposes. It is simply there for you to practice. However, if this is an official league qualification match, your points will be considered as an official record.

At elimination finals, the top n teams[33] will be honored as alliance leaders. They will choose an alliance partner for the following elimination matches. The winning alliance leader will be deemed as the champion of the event in terms of robot matches.

Note that FTC is a holistic competition, having the best robot does not mean being the best team.

At official elimination competitions, your team may be required to make a presentation about who you are and everything that goes with FTC. These are just assessments to holistically judge your team, beyond just pure robot performance. You may also be required to produce a physical copy of your engineering notebook for the same reason.

5.4.1 Inter-Team Communication

Inter-team communication is critical, especially during league matches. Miscommunication may cause mayhem, including interference during autonomous mode, crashing into each other and potentially cause disconnection, as well as decreasing the efficiency of scoring during the match.

Preferably, you should talk to your alliance partners ahead of time and sort out your strategy long before the match. In addition, you should be honest with your current robot status, as many teams

[32] This changes every season. As of the 2021-2022 Freight Frenzy Season, it is called the team shipping element.
[33] Usually 4, sometimes more if the event hosts a large number of teams, although it is a very rare occurrence.

miscalculate their robot's capability (we have definitely done that before). If your robot has encountered an issue, let your alliance partner of the following matches know ahead of time, so they may adapt their strategy accordingly.

5.4.2 Scouting

At your first event, you might see many teams running around, talking to you all with a pen and a clipboard. They are scouting, and they essentially want to know how good your robot is, what can your robot do, and how they can adapt their strategy around yours.

This is a critical process of FTC and goes hand-in-hand with inter-team communication. Most teams do that so they have a good grip on if they must make certain adjustments to their program, especially autonomous mode, since two alliance partner's robots may collide with each other.

In addition, if the team is confident at becoming one of the alliance leaders, they need to watch your robot in action, how your drivers work together, and how helpful you may be to them down the line as an alliance partner.

Regardless of your competitiveness, you should still do scouting, especially when you can borrow design ideas from other teams while doing so. In addition, observing other teams' strategy ideas can often help you to improve your ideas.

5.4.3 Working with your Alliance Partner

Working with an alliance partner is really intense, but really fun too. With some luck, the match will go smoothly rather than taking a comedic turn, which happens frequently. Again, as are the previous two subsections, this section discusses the communication aspect of FTC.

If the season require a "human player" to place certain components on the playing field, you should regulate with your alliance partner regarding who should be doing that and what should this person do. In addition, teams will be at their shared alliance station, meaning they can work with each other closely and talk during the match.

Your drivers should be very communicative and must work well together. Ideally, one of the field coaches should be regulating the drivers from both teams while the other focus on calling out penalties for the other alliance. If not, drivers must be independent and take up this responsibility because field coaches should be focused on penalties and field rules.

Divide the tasks ahead of time, and make sure everyone knows what to do ahead of time. Nothing is going to go to plan, so create a secondary strategy instead of going complete by the spur of the moment. That is usually when you break your robot.

5.5 Engineering Notebook and Portfolio

Engineering notebooks are where you document your progress. There really is not a single way to organize it, every team will have their different take on documentation. The key here is to find a specific process that works for all your team members and actually make valid inputs.

In the past, we have generally struggled to document our progress. This can be easily rectified by having a team manager who is absolutely on par and simply focusing on making everyone do their

obliged tasks. In addition, having a set platform to communicate will also help since everyone then is subject to check their status frequently, as supposed to have smaller groups on a separate platform. It just makes your life difficult when communicating.

The engineering portfolio is essentially an extract of the engineering notebook, made more concise and graphical for the judges to see your progress. If they are impressed by the portfolio, only then they will look at your engineering notebook.

Therefore, your efforts should be well distributed, with certain emphasis on making your portfolio as nice as possible.

6 Resources

Mecanum Wheel Tutorial form AndyMark:

https://files.andymark.com/PDFs/MecanumWheelTutorial.pdf

Tetrix Omni Wheelbase Building Tutorial:

https://www.fllcasts.com/materials/342-tetrix-box-robot-chassis-for-ftc-competitions#is-js-viewer

Timing Belt and Chain Technical Directory:

https://sdp-si.com/PDFS/Technical-Section-Timing.pdf

Official 2021-2022 Wiring Guide:

https://www.firstinspires.org/sites/default/files/uploads/resource_library/ftc/robot-wiring-guide.pdf

REV Robotics Intake Kickoff Concepts:

https://docs.revrobotics.com/kickoff-concepts/freight-frenzy-2021-2022/intake

Example Sponsorship Package:

https://entradoxrobotics.notion.site/entradoxrobotics/Sponsorship-Package-9e4ec12c3a1e42f09716867b5c18b83b

7 References and Acknowledgement

7.1 References

[1] "Mecanum wheel tutorial - files.andymark.com." [Online]. Available: https://files.andymark.com/PDFs/MecanumWheelTutorial.pdf.

[2] "Tetrix Box Robot chassis for FTC Competitions," *FLLCasts*. [Online]. Available: https://www.fllcasts.com/materials/342-tetrix-box-robot-chassis-for-ftc-competitions#is-js-viewer.

[3] "2920 series steel set-screw collar (1/4' bore) - 2 pack," *ServoCity*. [Online]. Available: https://www.servocity.com/2920-series-steel-set-screw-collar-1-4-bore-2-pack/.

[4] L. Lipot, "Chain and sprocket," *Mechanisms: Chain and Sprocket*. [Online]. Available: https://www.notesandsketches.co.uk/Chain_and_Sprocket.html.

[5] Unknown, "What makes a machine so simple?," *What makes a Machine so Simple?*, 01-Jan-1970. [Online]. Available: https://rmhspoe.blogspot.com/2013/11/what-makes-machine-so-simple.html.

[6] "Building roller chain geometries in the Multibody Dynamics Module," *COMSOL*. [Online]. Available: https://www.comsol.com/blogs/building-roller-chain-geometries-in-the-multibody-dynamics-module/.

[7] "Belt routing," *Just Commodores*. [Online]. Available: https://forums.justcommodores.com.au/threads/belt-routing.266378/.

[8] Arcticpenguin and Instructables, "When a Phillips is not a Phillips!," *Instructables*, 08-Nov-2017. [Online]. Available: https://www.instructables.com/When-a-Phillips-is-not-a-Phillips/.

[9] The Zen Cart™ Team and others, "Measuring tips," *Metric Screws are our specialty*. [Online]. Available: https://www.metricscrews.us/index.php?main_page=page&id=3.

[10] "US machine screw diameters," *Bolt Depot - Machine Screw Diameter Table*. [Online]. Available: https://www.boltdepot.com/fastener-information/machine-screws/machine-screw-diameter.aspx.

[11] "U-channel (13 hole, 10.50' length)," *ServoCity*. [Online]. Available: https://www.servocity.com/10-50-aluminum-channel/.

[12] *Kickoff Concepts Overview - kickoff concepts*. [Online]. Available: https://docs.revrobotics.com/kickoff-concepts/.

[13] *2021-2022 FIRST Tech Challenge Robot Wiring Guide.* [Online]. Available: https://www.firstinspires.org/sites/default/files/uploads/resource_library/ftc/robot-wiring-guide.pdf.

[14] "Rev Robotics Expansion Hub Mount," *ServoCity*. [Online]. Available: https://www.servocity.com/rev-robotics-expansion-hub-mount/.

[15] "FTC starter kit V3," *REV Robotics*. [Online]. Available: https://www.revrobotics.com/rev-45-1883/.

[16] "TETRIX FIRST Tech Challenge Competition Set," *Pitsco.* [Online]. Available: https://www.pitsco.com/Competitions-Clubs-and-Programs/FIRST-Tech-Challenge/TETRIX-FTC-Competition-Set.

[17] "FTC Competition Kit (21-22 Season)," *ServoCity.* [Online]. Available: https://www.servocity.com/ftc-competition-kit-21-22-season/.

[18] "Master FTC Kit (8mm REX Shaft, 2021-2022 Season)," *ServoCity.* [Online]. Available: https://www.servocity.com/master-ftc-kit-8mm-rex-shaft-2021-2022-season/.

[19] "(PDF) fault detection and localization of ... - researchgate." [Online]. Available: https://www.researchgate.net/publication/271324967_Fault_detection_and_localization_of_mechanical_drives_based_on_data_fusion_techniques.

[20] "Sprocket and chain physics," *Advanced Sprockets and Chain - 15mm Build System*. [Online]. Available: https://docs.revrobotics.com/15mm/transmitting-and-transforming-motion/sprockets-and-chain/sprockets-and-chain-advanced.

[21] "1524 series Arc-slot tensioner bracket," *goBILDA*. [Online]. Available: https://www.gobilda.com/1524-series-arc-slot-tensioner-bracket/.

[22] Victor Leung, "Polargraph – Drawing Board," *Victor Leung*, 28-Apr-2013. [Online]. Available: http://www.victorleung.info/post/polargraph-drawing-board/.

[23] "TETRIX® Max Rack and Pinion Linear Slide Pack," *TETRIX® MAX Rack and Pinion Linear Slide Pack (W39300)*. [Online]. Available: https://www.pitsco.com/TETRIX-Rack-and-Pinion-Linear-Slide-Pack.

[24] "Cascading X-Rail Slide Kit," *ServoCity*. [Online]. Available: https://www.servocity.com/cascading-x-rail-slide-kit/.

[25] "Linear Actuator kit a (7.4' stroke X-rail piston)," *ServoCity*. [Online]. Available: https://www.servocity.com/linear-actuator-kit-a-7-4-stroke-x-rail-piston/.

[26] "Our Robots - Acme Robotics." [Online]. Available: https://goacmerobotics.com/our-robots/.

[27] "Requirements," *Intake - Kickoff Concepts*. [Online]. Available: https://docs.revrobotics.com/kickoff-concepts/freight-frenzy-2021-2022/intake.

[28] "Fusion 360 tutorial: Basics and tips for 3D printing," *Formlabs*. [Online]. Available: https://formlabs.com/eu/blog/fusion-360-tutorial-basics-and-tips-for-3d-printing/.

[29] "What's New: Autodesk Inventor 2019.1 Update," *Autodesk*. [Online]. Available: https://blogs.autodesk.com/inventor/2018/07/19/whats-new-autodesk-inventor-2019-1-update/.

[30] "Designing an Open-Access F1 Car on the Cloud," *Onshape.* [Online]. Available: https://www.onshape.com/en/resource-center/innovation-blog/designing-an-open-access-f1-car-on-the-cloud.

7.2 Acknowledgement

Phoebe Xu and Grace Yu of Entradox Robotics are the co-authors of this guide. If you have any question or suggestions, feel free to direct them to *grace.yu@meadowridge.bc.ca* or *phoebe.xu@meadowridge.bc.ca*[34].

This guide is inconclusive, it is just something to start up with. If you find any error in formatting, citing, or just the general content, please let us know and we fix the issue as soon as possible.

[34] If you have any technical questions or suggestions, please email to the former because Grace drafted up most of the technical contents, whereas Phoebe focused on diagrams, readability, and general aesthetics of the guide.